KONFLIKT'47

US M2A5 LINEBACKER JUMP WALKER

ASSEMBLY GUIDE



The Linebacker jump walker drops into the thick of the action!

This mobile, powerful walker packs a heavy punch, and can be equipped with a wide assortment of weaponry, allowing it to take on any challenge.

ASSEMBLY GUIDE KEY

A	Assembly stage		Do not glue	22	Part number
A	Previous assembly stage	!	Special assembly instructions	?	Optional assembly
	Drill part				

Follow this simple guide to build your M2A5 Linebacker Jump Walker.

Carefully remove each component from the frame with clippers or a craft knife. Trim off excess plastic before assembling. Test fit all components before applying glue.

We recommend using plastic glue to assemble the kit. Please follow all usage and safety advice given on the product.

Keep tools, glues, paints, and small components away from children. Warlord Games recommends this kit for ages 14 and over.

DECAL APPLICATION GUIDE

- Apply a coat of gloss varnish to the areas that will receive the decal and allow this to dry fully.
- Cut out a decal from the sheet and soak it in lukewarm water for 1-2 minutes.
- Once the design has started to separate from the backing paper, use tweezers or a wet paintbrush to slide the design into place on the model.
- Use a tissue to dab away any excess water from the model and allow to dry.
- Apply a coat of matt varnish to seal the decal in place.



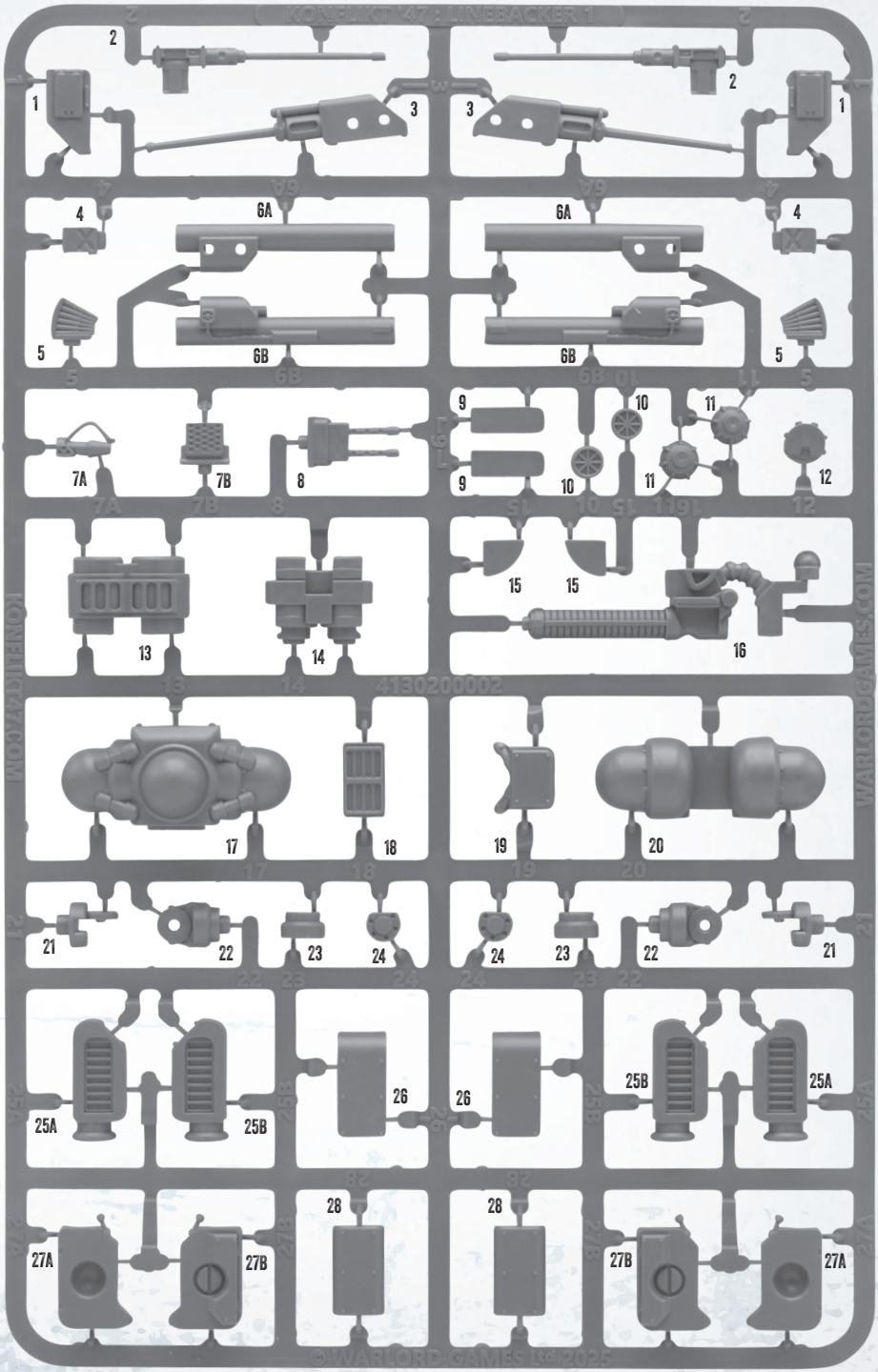
KONFLIKT '47: LINEBACKER 1
1
2
3
4
5
6A
6B
7A
7B
8
9
10
11
12
13
14
15
16
17
18
19
20
21
22
23
24
25A
25B
26
27A
27B
28
WARLORD GAMES
© WARLORD GAMES LTD 2025

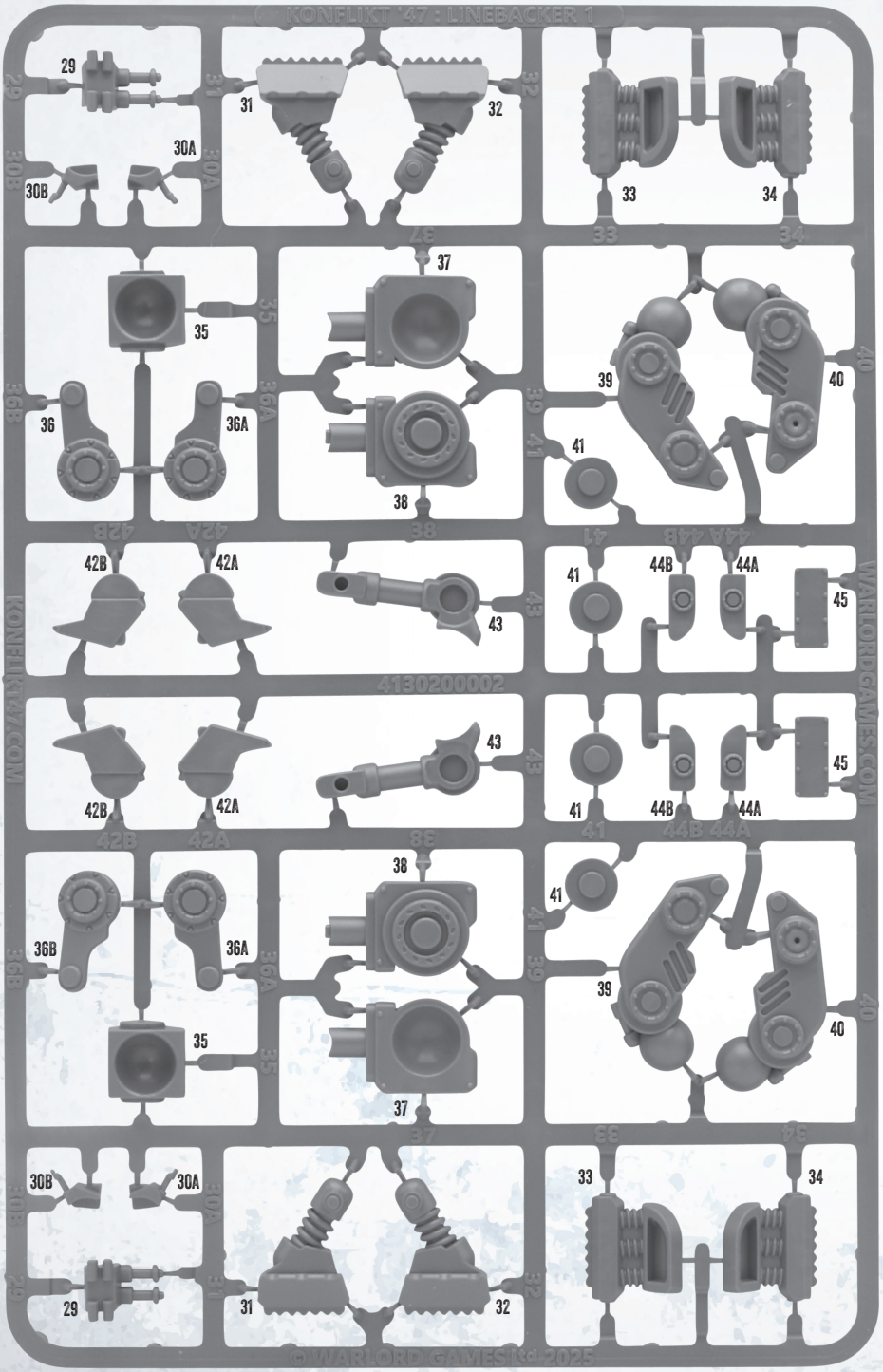
KONFLIKT '47 : LINEBACKER 1
29
30A
30B
31
32
33
34
35
36
36A
37
38
39
40
41
42B
42A
43
44B
44A
45
36B
WARLORDGAMES.COM
© WARLORD GAMES Ltd 2025

KONFLIKT '47 : LINEBACKER 2
4130200003
© WARLORD GAMES Ltd 2025
WARLORDGAMES.COM
1
2
3
4
5
6
7
8
9
10
11
12
13
14
15
16
18
19
20
21
22

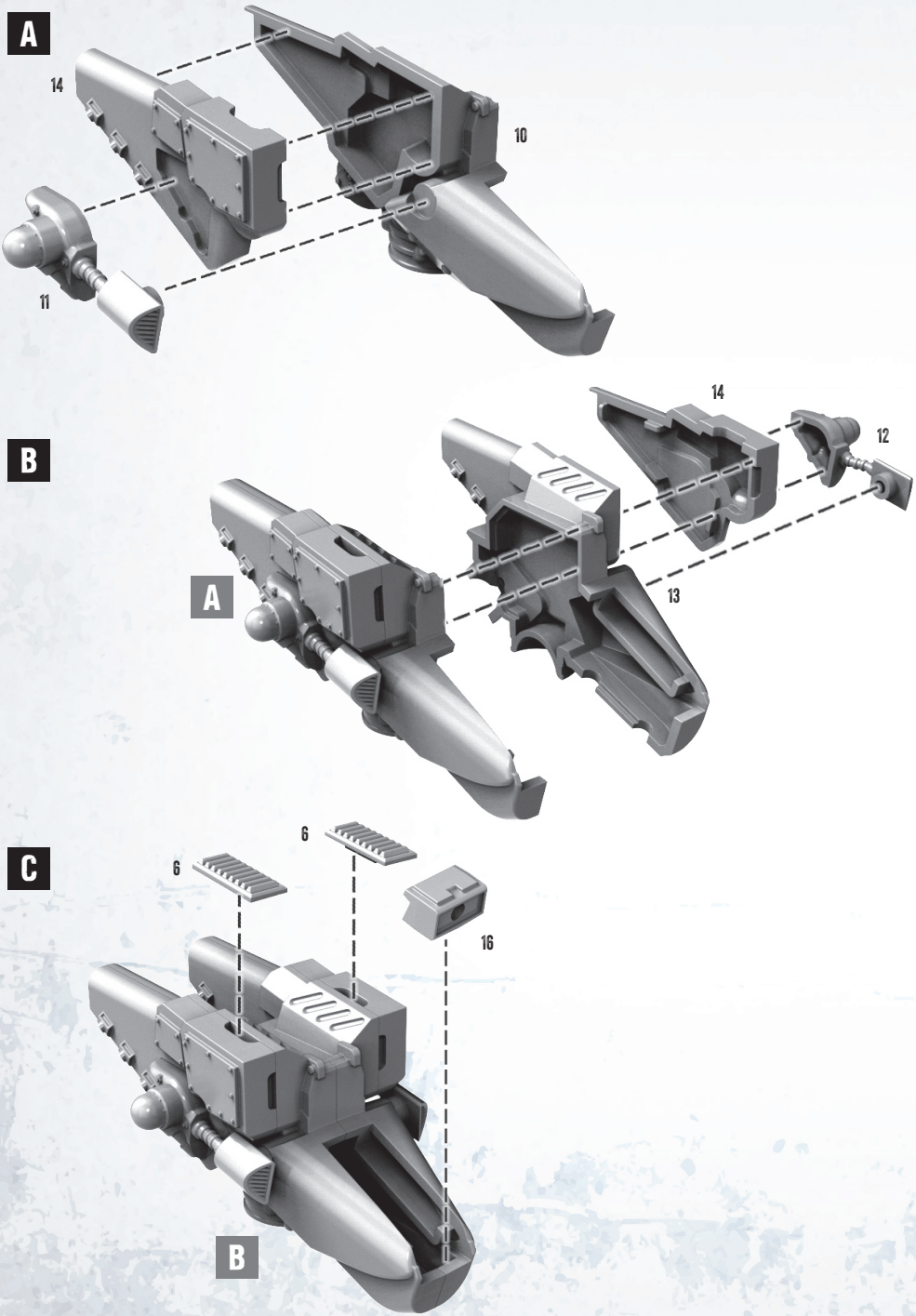
A
14
10
11
B
14
12
A
13
C
6
6
16
B

D

1

2

There are two different heads to choose from.

8

3

C

9

E

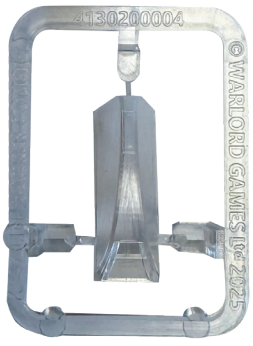

Clear canopy sprue.

Insert clear canopy after painting.

D

F

E

4

5

4

5

G

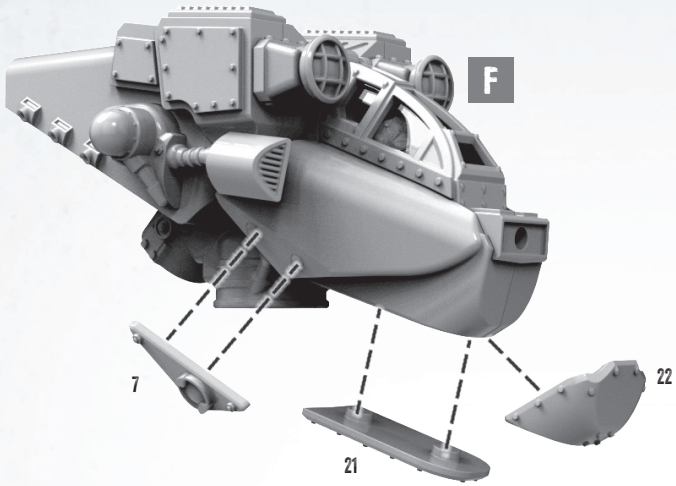

H

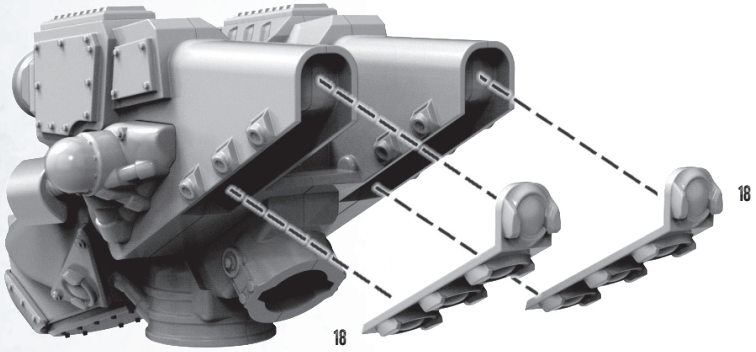

G



I

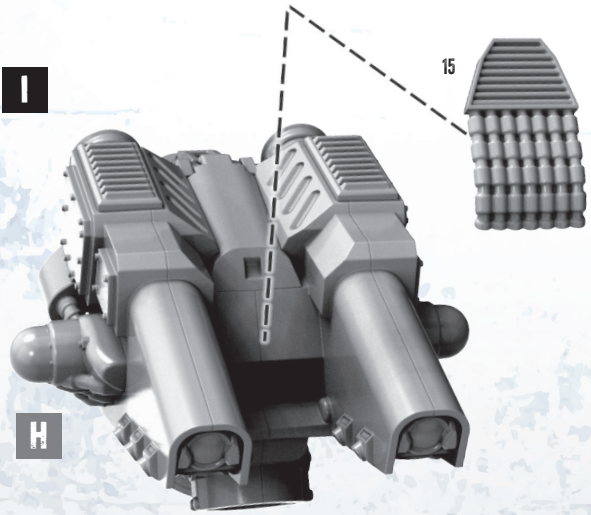

H

J

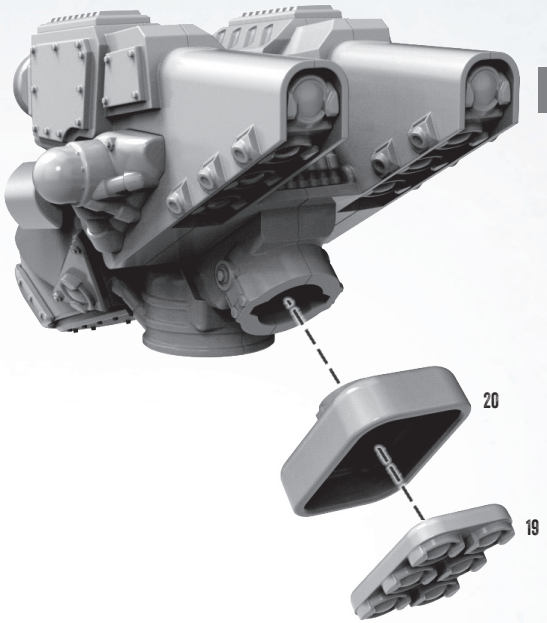

K

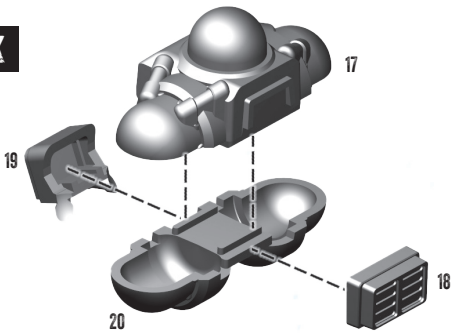

K

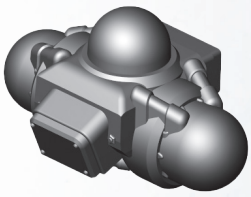

L x 2

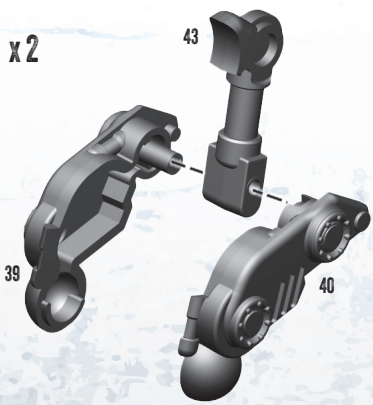

L



Repeat stages L-W for both the left and right legs

M x 2

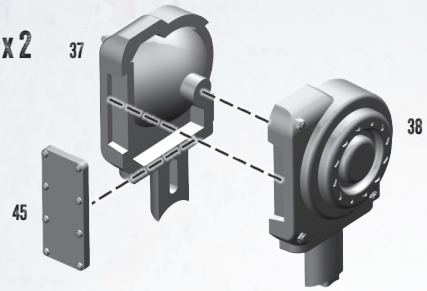

N1 x 2

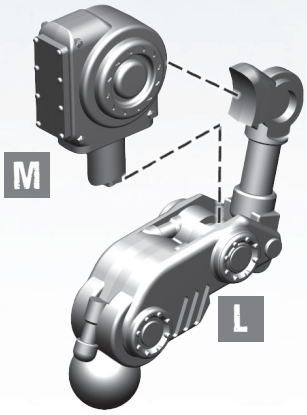

N2 x 2

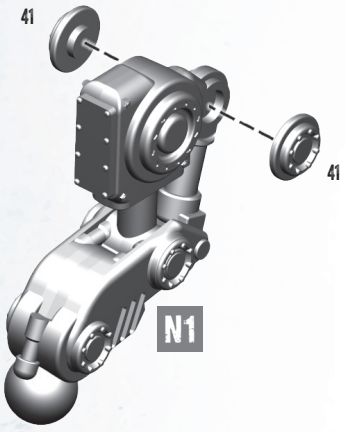

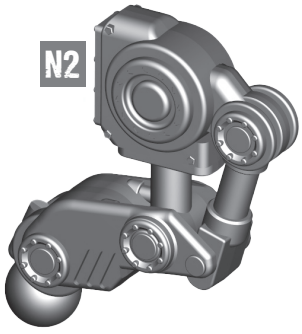

O x 2

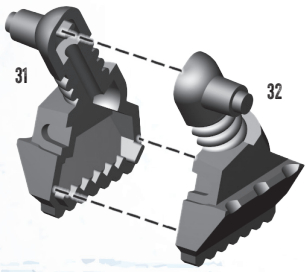

P x 2

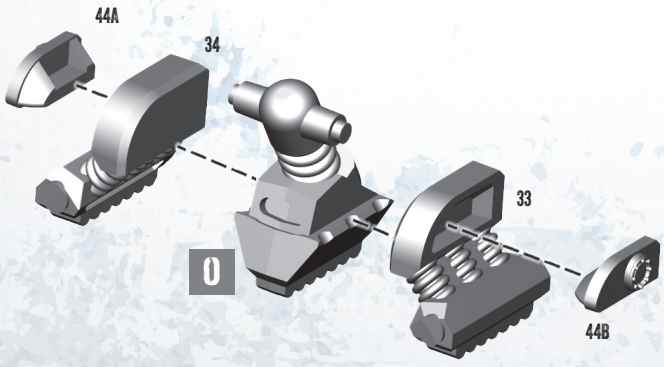

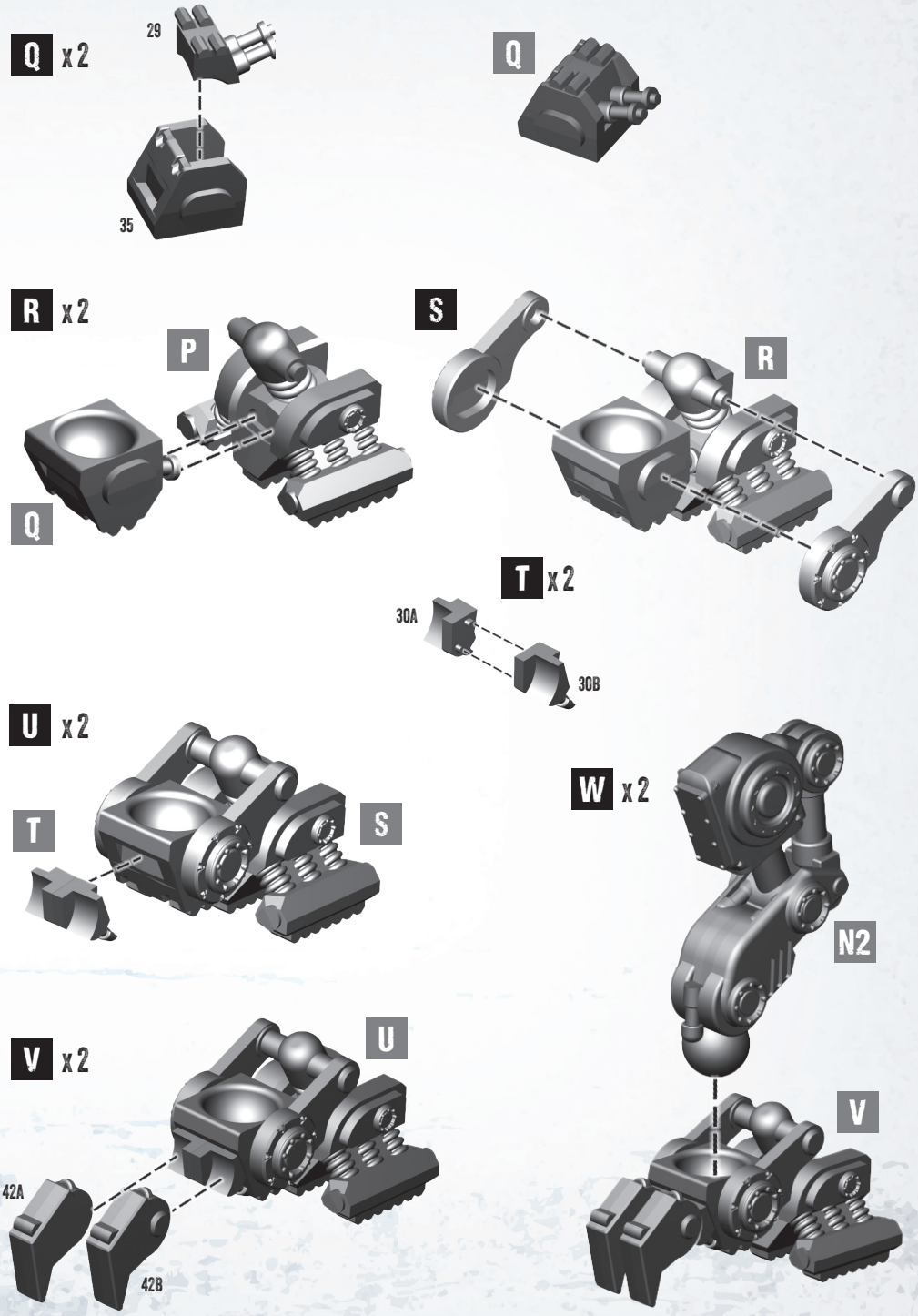
Q x 2
29
35
Q
R x 2
P
Q
S
R
T x 2
30A
30B
U x 2
T
S
W x 2
N2
V
V x 2
U
42A
42B

X

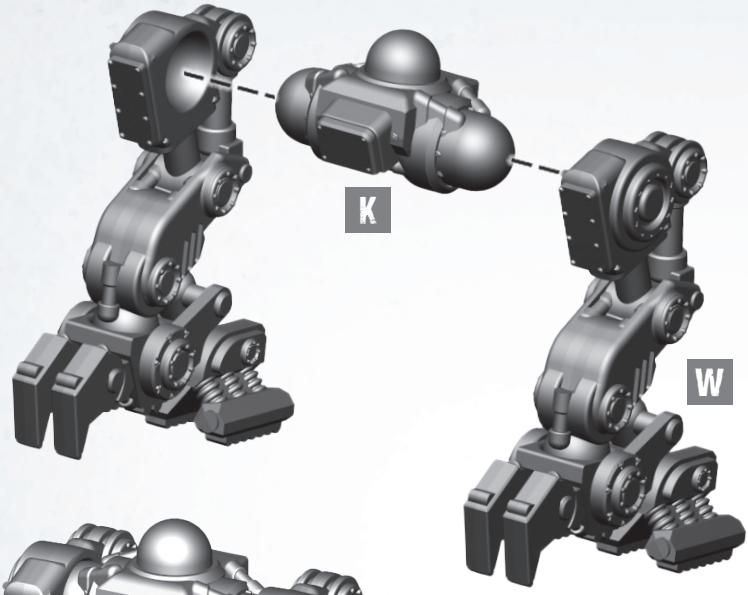

X

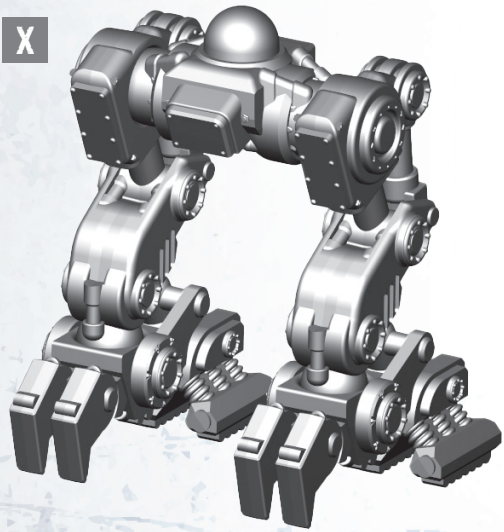

Y x 2

Repeat stages Y-Z5 for both the left and right arms

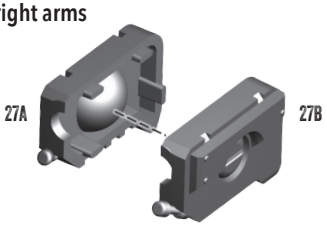

Z x 2

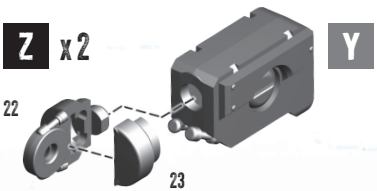

Z1 x 2

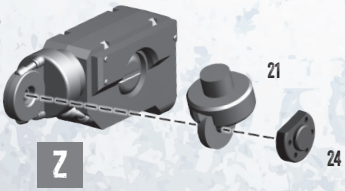

Z2 x 2

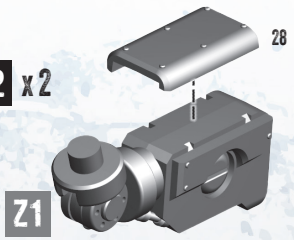

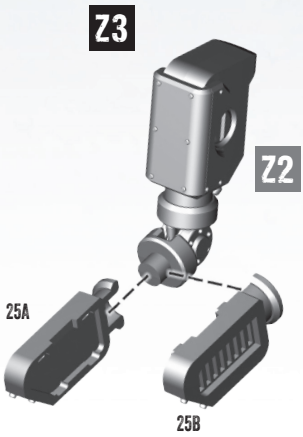



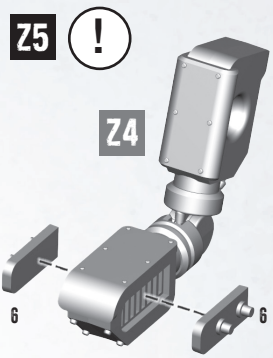

Apply this stage for Autocannons, Super-Bazookas, or HMG's only.

Construction option for the Autocannon.

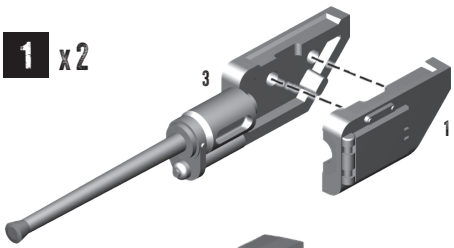

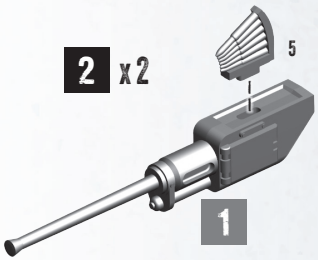

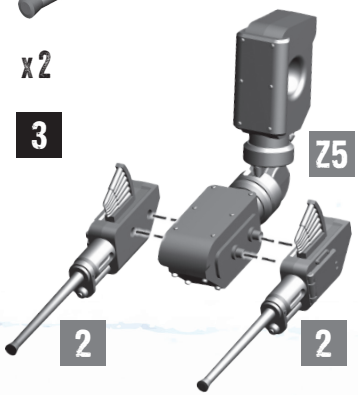

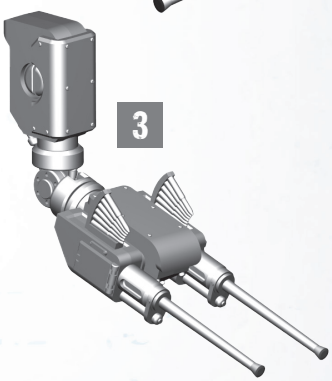

Construction option for the Super Bazooka.

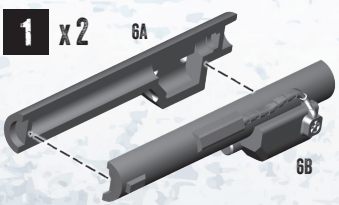

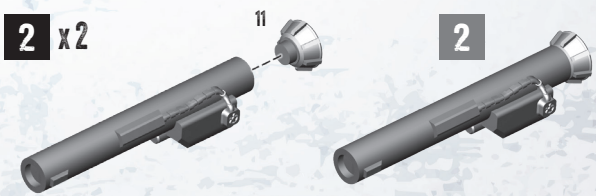

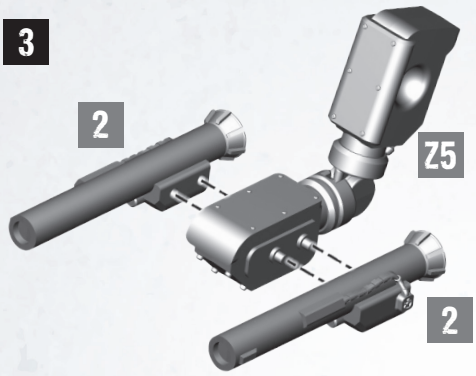

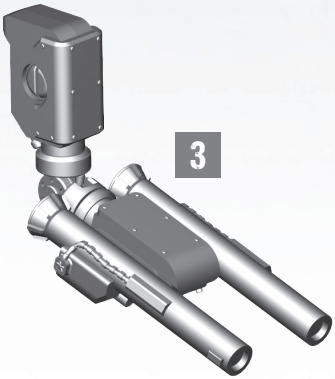

Construction option for the HMG.

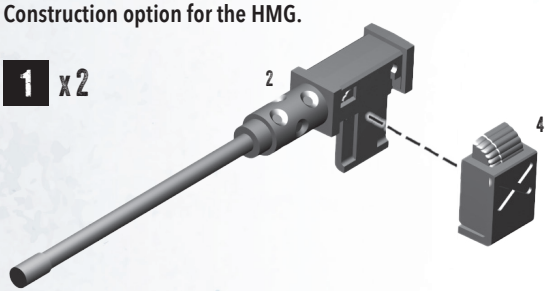

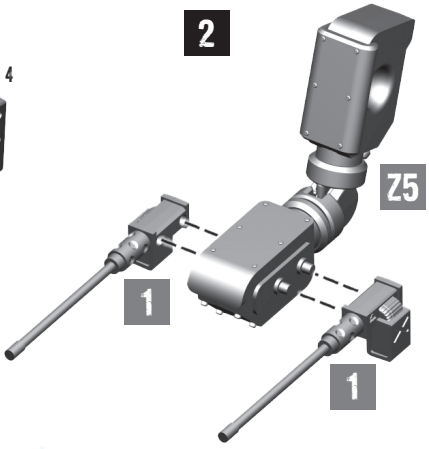

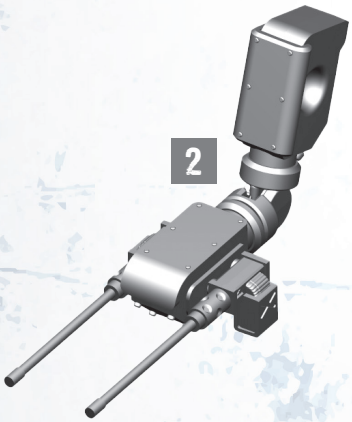

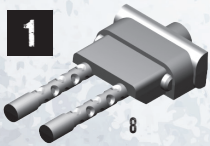

Chin-mounted option for the MMG.

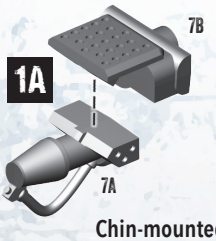

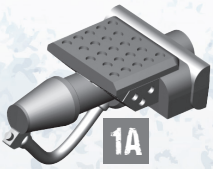

Chin-mounted option for the Flamethrower.

Construction option for the Light Tesla Cannon.

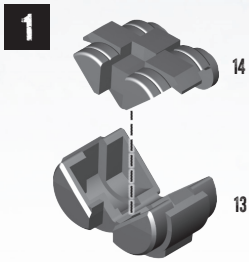

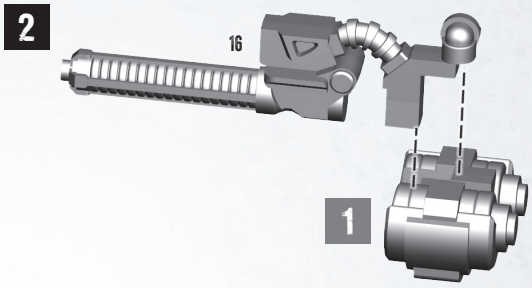

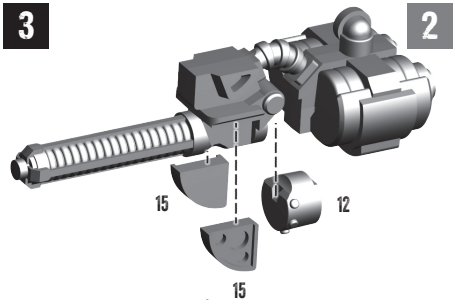

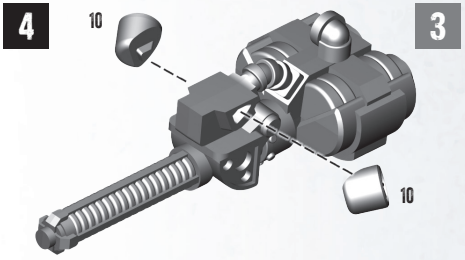

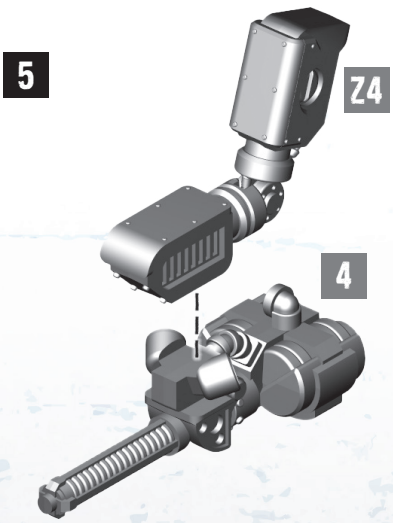



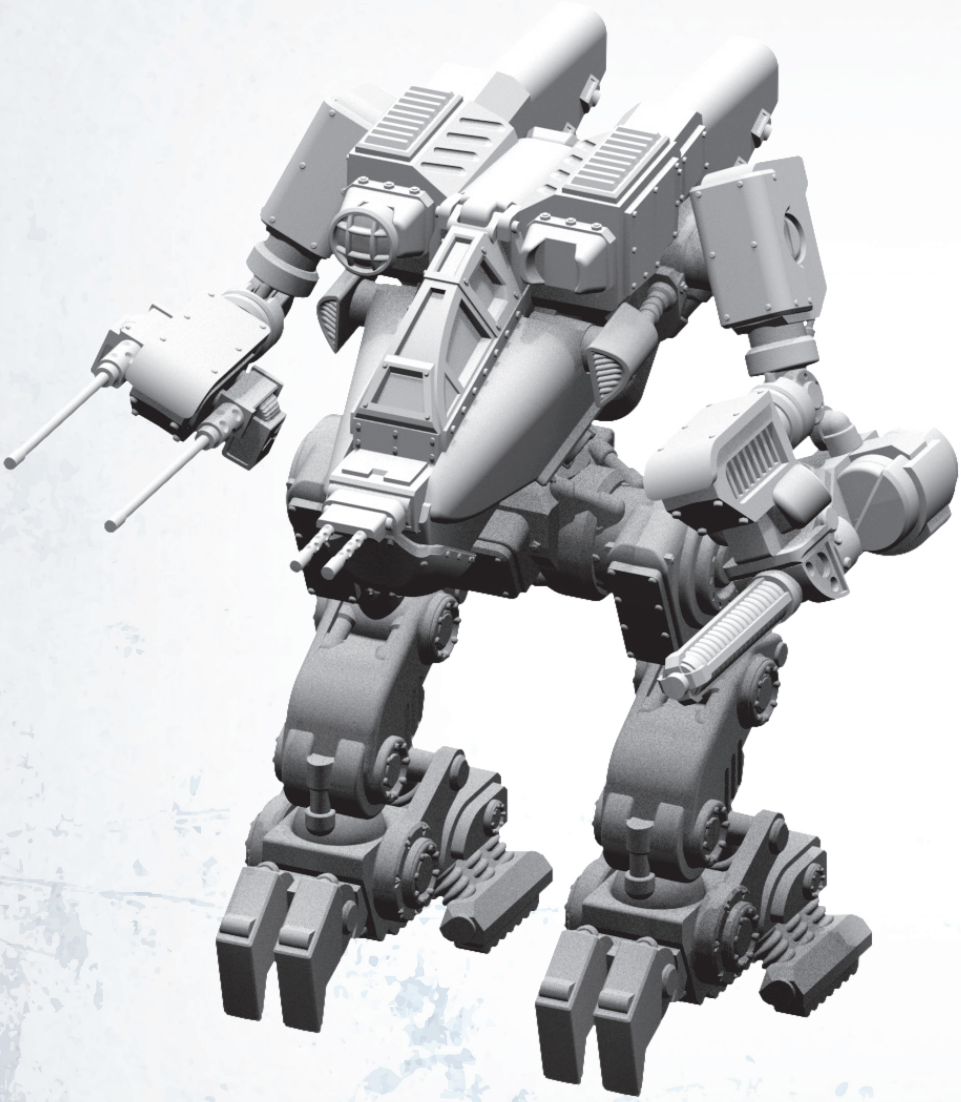

M2A5 Linebacker with Light Tesla Cannon and Heavy Machine Guns.

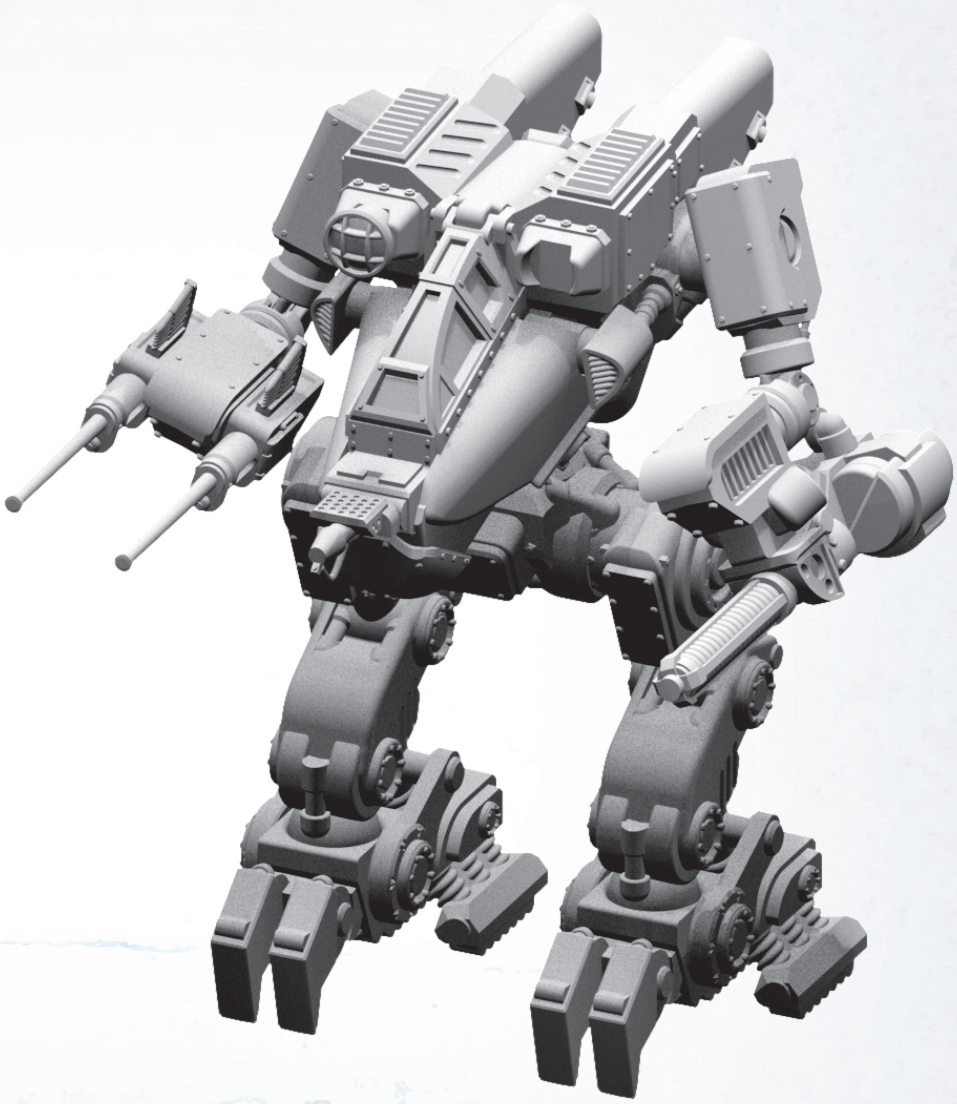

M2A5 Linebacker with Light Tesla Cannon and Autocannons.



M2A5 Linebacker with Light Tesla Cannon and Super Bazookas.



Chin-mounted Medium Machine Guns.



Chin-mounted Flamethrower.





THIS IS NOT WAR.
THIS IS THE END.

Copyright Warlord Games Ltd. 2025

Component code: **4170200003**