4070600001 Char B1 bis leaflet.qxp 11/10/2017 12:57 Page 1

World War II Wargame
BOLT ACTION™
www.boltaction.com

CHAR B1 BIS

ASSEMBLY AND PAINTING GUIDE



Upgrading the Char B1, the Char B1 bis had thicker armour and an APX4 turret with a longer-barrelled (L/32) 47 mm SA 35 gun, giving it more anti-tank capacity alongside the 75mm hull-mounted howitzer.

French experiences during The Great War influenced their belief a breakthrough tank would be needed in future conflicts, hence the design of the heavy Char B1 and B1 bis.

Among the most powerful tanks at the time, the Char B1 bis was very effective against German panzers in 1940 during the Battle of France. However, slow speed and high fuel consumption made it ill-adapted to the more fluid style of warfare being fought at that time.

With the fall of France the victorious German militarycaptured 161 Char B1 bis tanks and repurposed them under the nomenclature Panzerkampfwagen B-2 740 (f). Several were also converted into flamethrowing tanks.

This kit allows you to build French or German gun tanks or as one of two versions of German flammpanzers.

No. produced:	369
Crew:	4
Powerplant:	Renault inline 6 cylinder 16.5 litre petrol
Top speed:	16 mph (25 km/h)
Range:	110 miles (180 km)
Armament:	75 mm ABS SA 35 howitzer (main) 47 mm SA 35 gun (secondary)
Armour:	60 mm
Weight:	28 tonnes

WARLORD GAMES™
warlordgames.com

ASSEMBLY GUIDE KEY

A Assembly stage	Do Not Glue.	22 Part number
A Previous assembly stage	Special assembly instructions	3 Decal number
Optional assembly	Drill part	987 Paint number (Vallejo)

Follow this simple guide to building your Char B1 bis medium tank.

Carefully remove each component from the frame with clippers or a craft knife. Trim off excess plastic before assembling. Test fit all parts before applying glue.

We recommend using polystyrene cement to assemble the kit, and to use this in a well-ventilated area.

Keep tools, glues, paints and small components away from children. Warlord Games recommend this kit for ages 14 and over.

DECAL APPLICATION GUIDE

- Apply a coat of gloss varnish to the areas that will receive the decal and allow this to dry fully.
- Cut out a decal from the sheet and soak it in luke warm water for 2-3 minutes.
- Once the design has started to separate from the backing paper, use tweezers or a wet paintbrush to slide the design into place on the model.
- Use a tisue to dab away any excess water from the model, and allow to dry.
- Apply a coat of matt varnish to seal the decal in place.

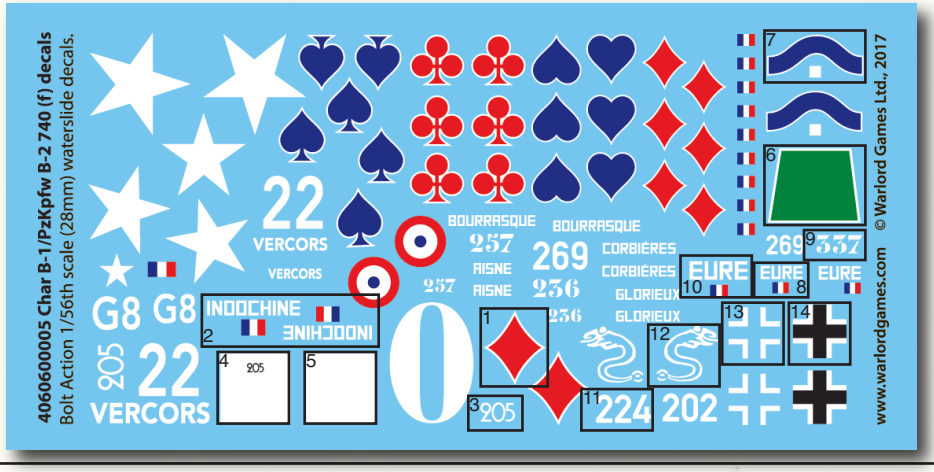

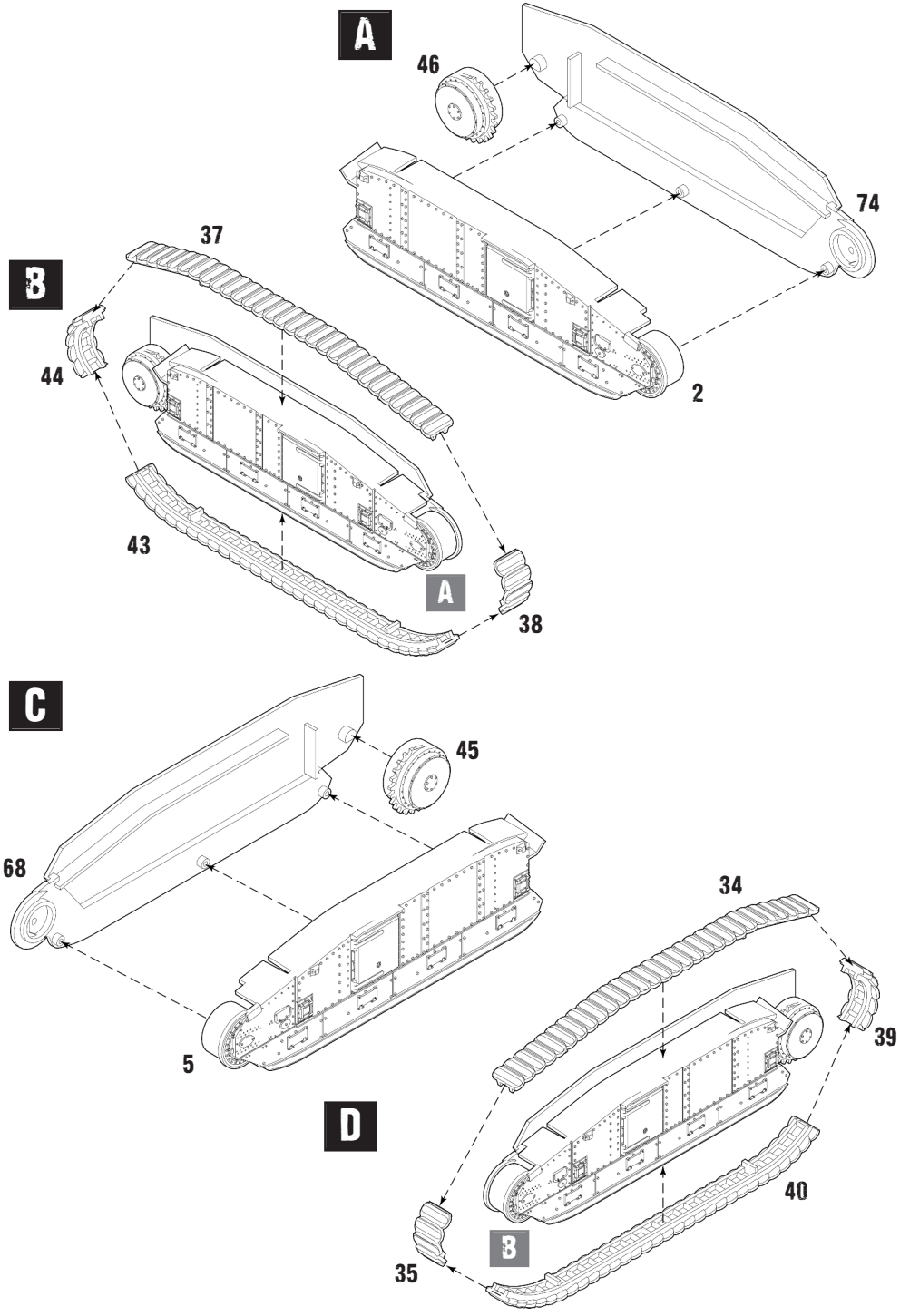
A
46
74
2
B
37
44
43
A
38
C
45
68
5
34
39
D
40
B
35

E

Drill out the holes in part 29 as shown below, depending on the version of the tank you want to build.

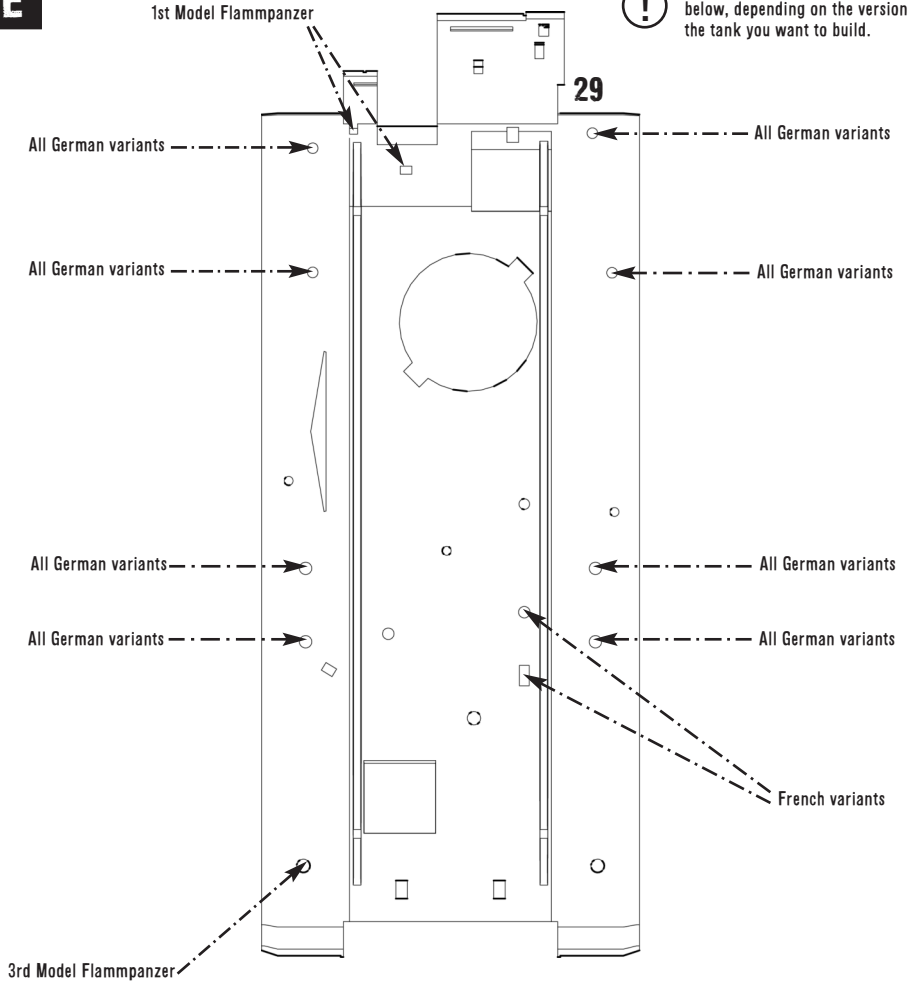

F

Only for French and German tank variants. For the assembly of flamethrowers for Flammpanzers, see the next step.

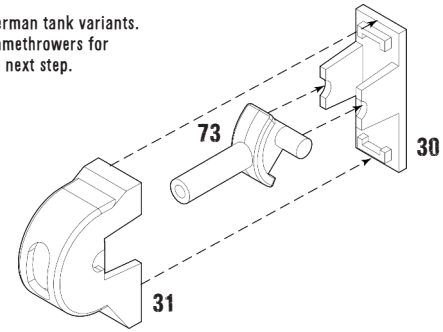

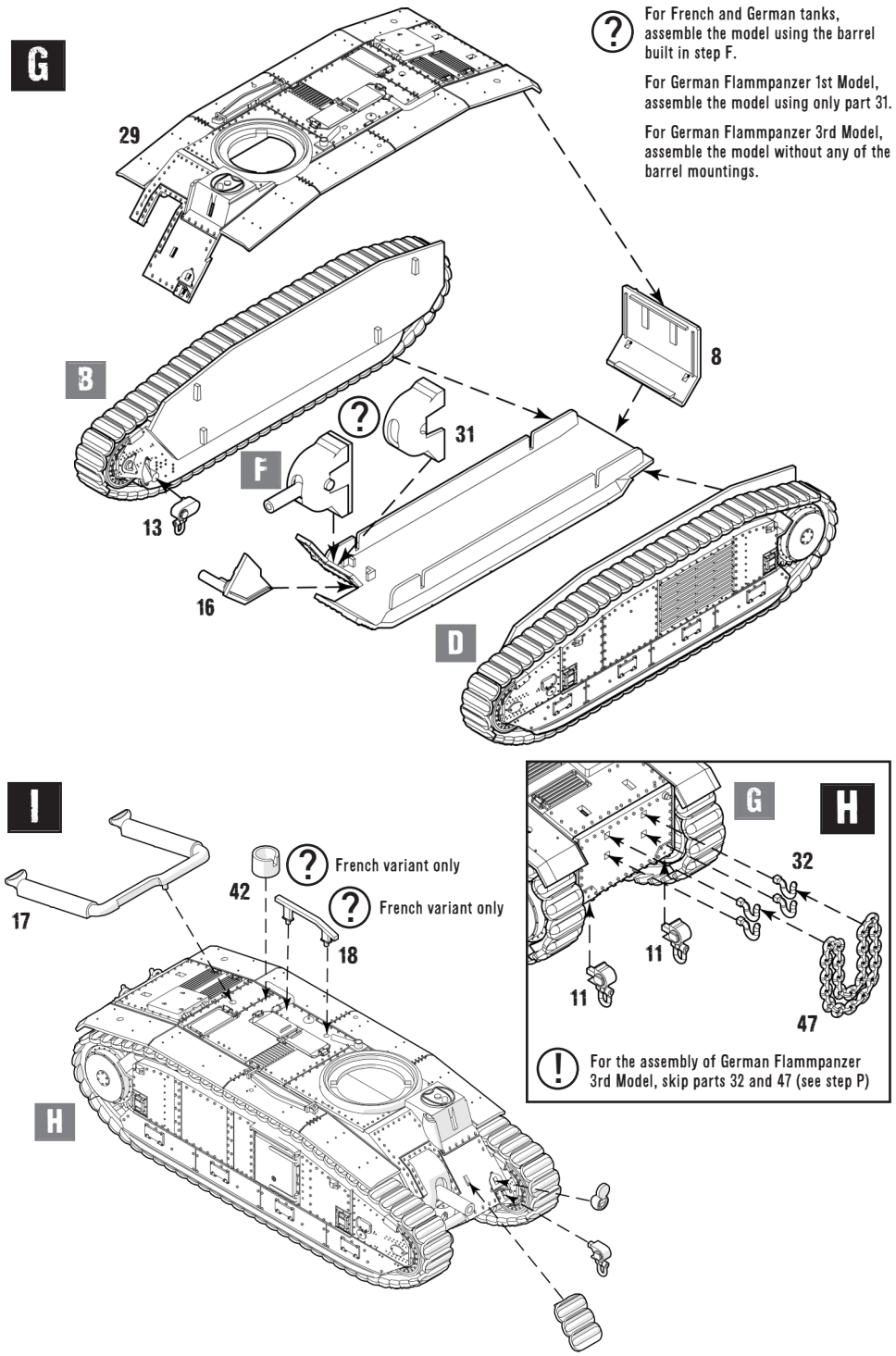
G
29
B
8
31
F
13
16
D
For French and German tanks, assemble the model using the barrel built in step F.
For German Flammpanzer 1st Model, assemble the model using only part 31.
For German Flammpanzer 3rd Model, assemble the model without any of the barrel mountings.
I
17
42
French variant only
18
French variant only
H
G
H
32
11
11
47
For the assembly of German Flammpanzer 3rd Model, skip parts 32 and 47 (see step P)

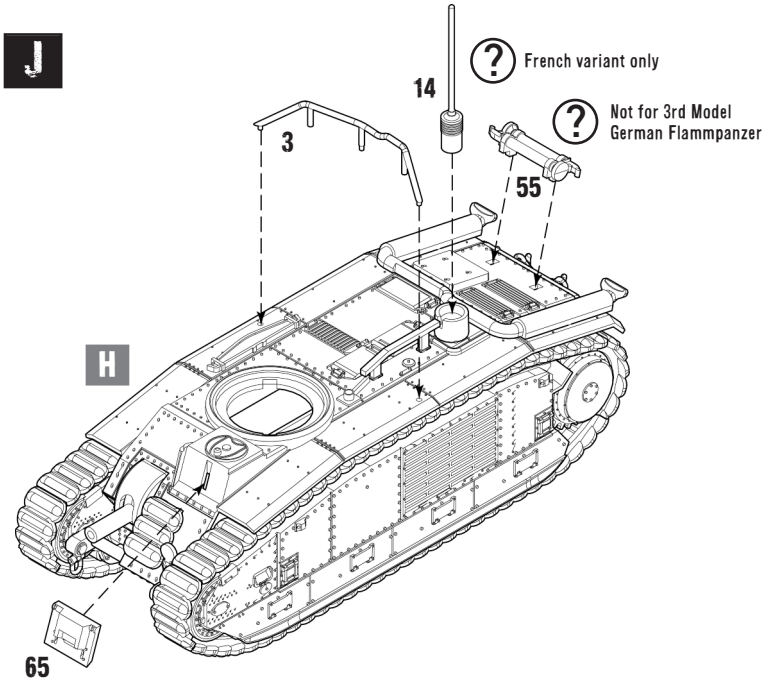
J
French variant only
14
Not for 3rd Model
German Flammpanzer
3
55
H
65

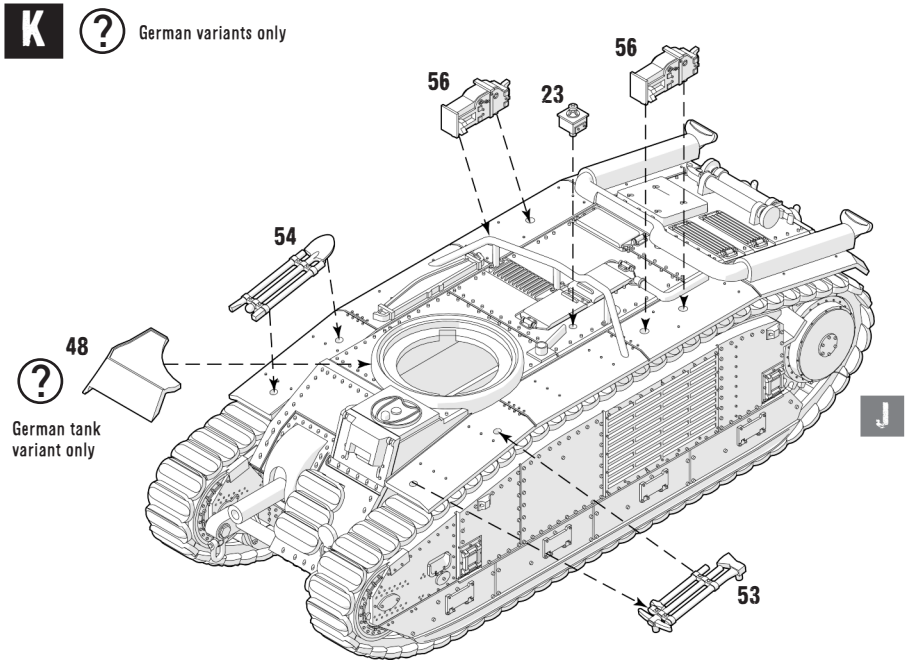
K
German variants only
56
56
23
54
48
German tank
variant only
J
53

ASSEMBLING THE TURRET

T1 To allow for the movement of the barrels, insert the part 64 into 21 without using glue, then glue part 71 to part 21 as shown below.

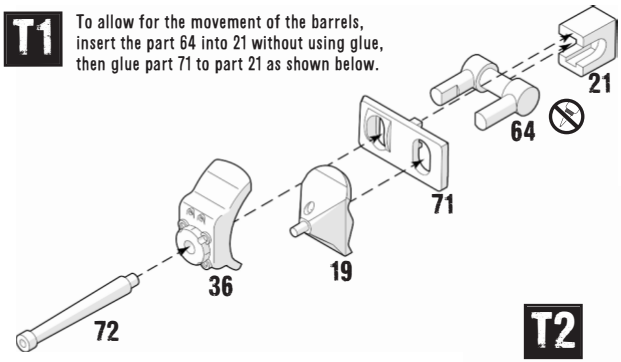

T2

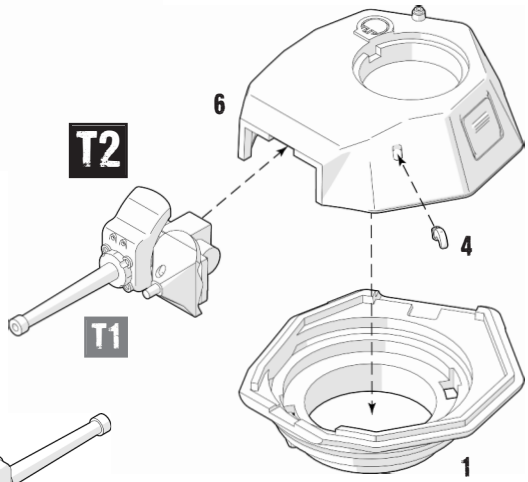

T3

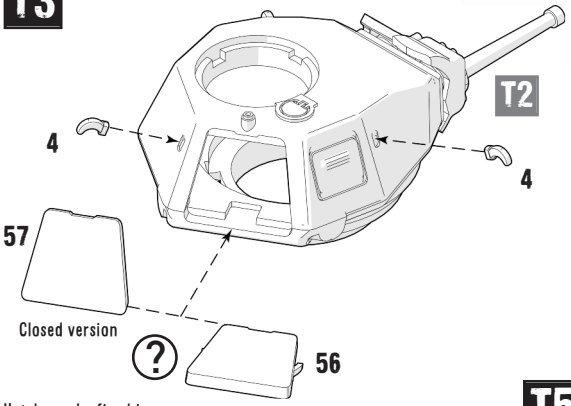

Hatch can be fixed in the open or closed position.

T4

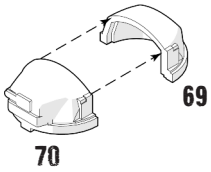

French tank, German Flammpanzer 1st Model and 3rd Model Variant A

T5 Hatches can be fixed in the open or closed position.

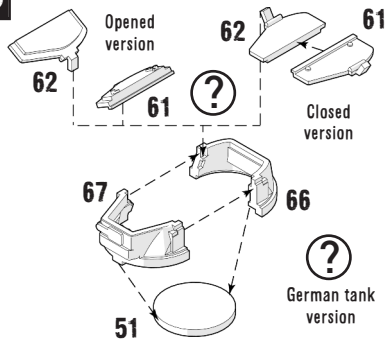

T6 French tank, German Flammpanzer 1st Model and 3rd Model Variant A

German tank version

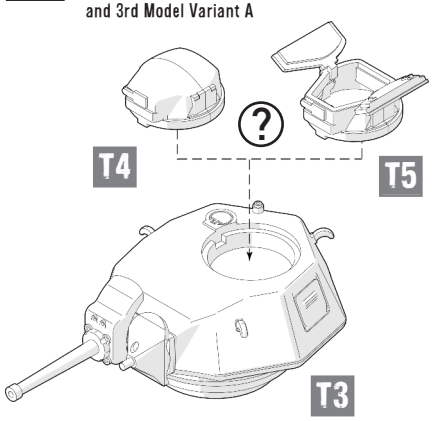

German Flammpanzer 3rd Model Variant B

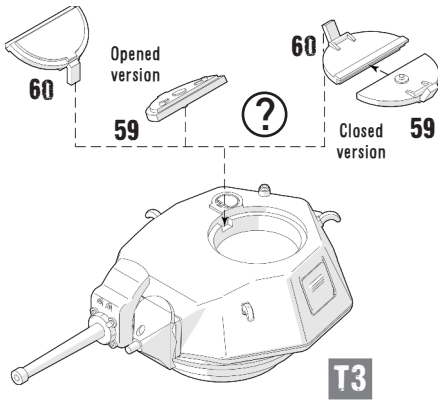

T7 French tank, German Flammpanzer 1st Model and 3rd Model Variant A

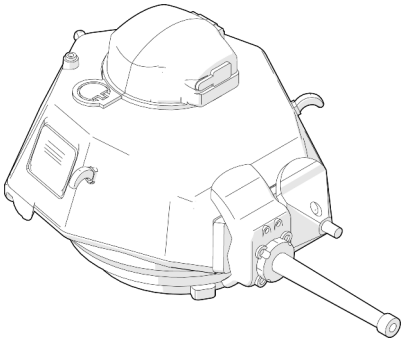

? Tank commanders can be placed in open hatches. Alternative commanders and crew are available from the Warlord games web store: www.warlordgames.com



French tank commander

German tank commanders

T8 German tank version

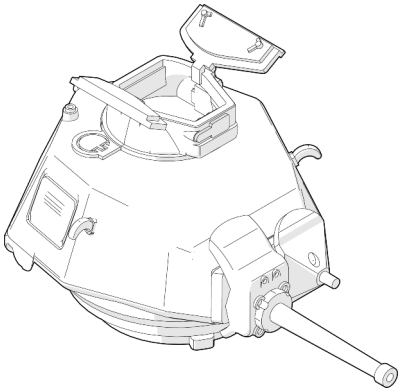

T9 German Flammpanzer 3rd Model Variant B

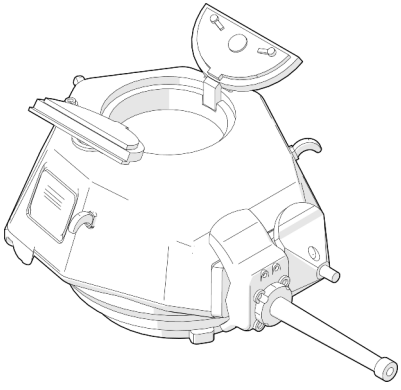

4070600001 Char B1 bis leaflet.qxp 11/10/2017 12:58 Page 9

FRENCH CHAR B1 BIS MEDIUM TANK

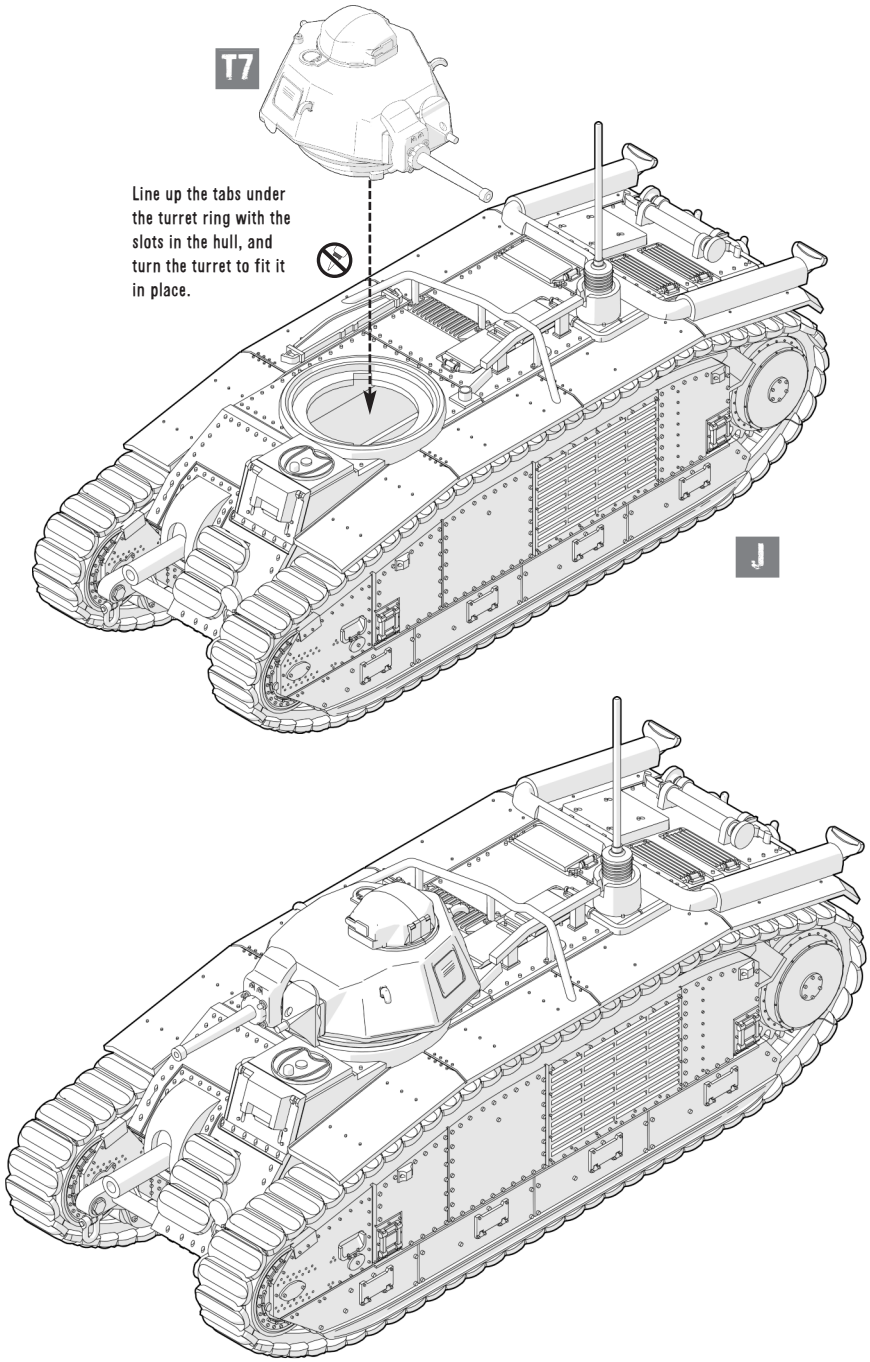

4070600001 Char B1 bis leaflet.qxp 11/10/2017 12:58 Page 10

GERMAN CHAR B1 BIS MEDIUM TANK

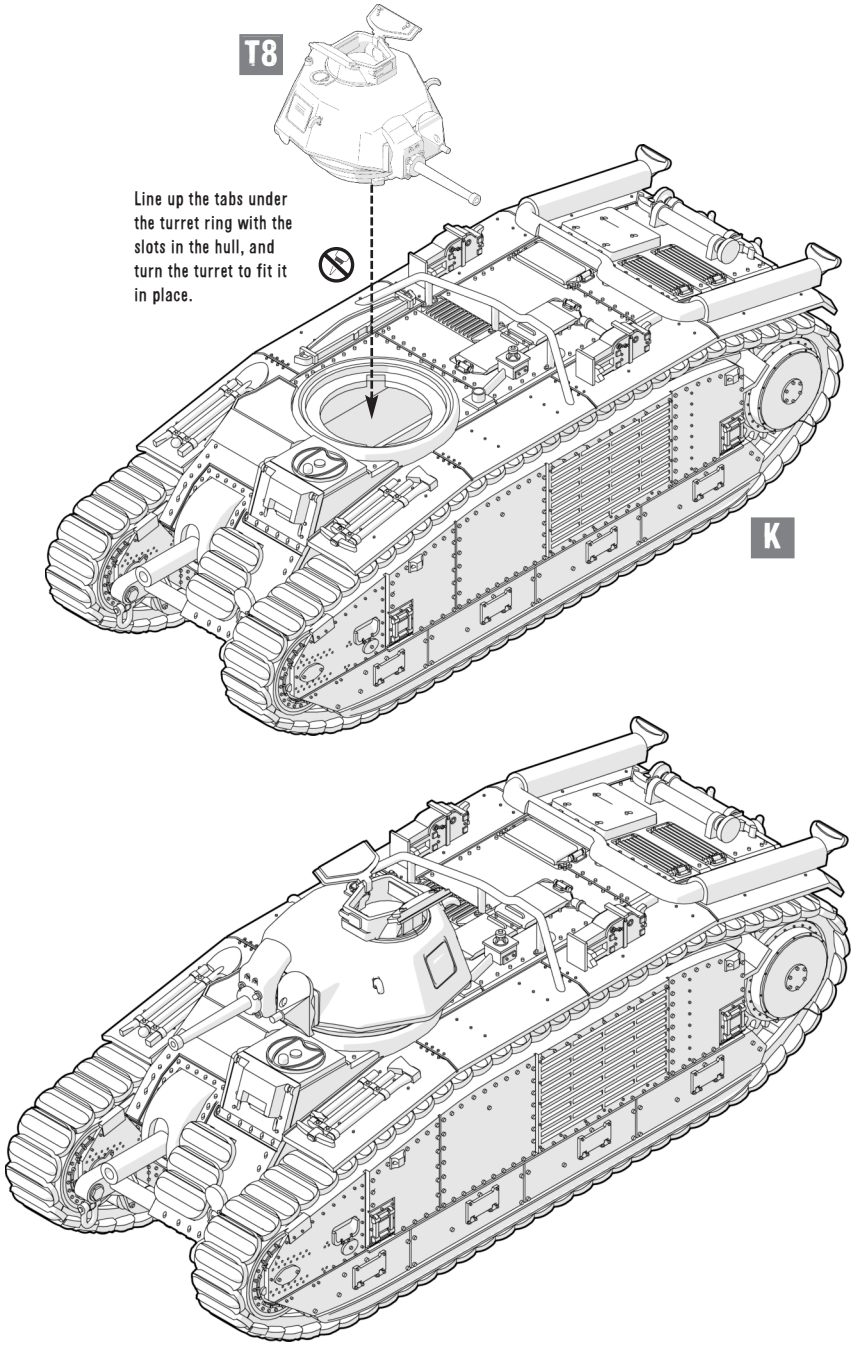

GERMAN FLAMMPANZER 1ST MODEL

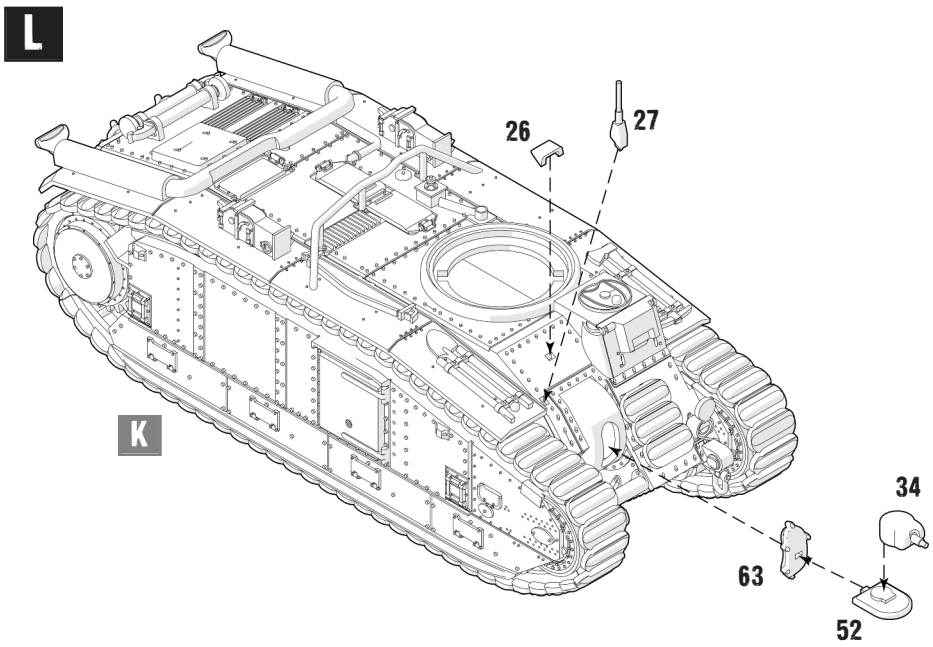

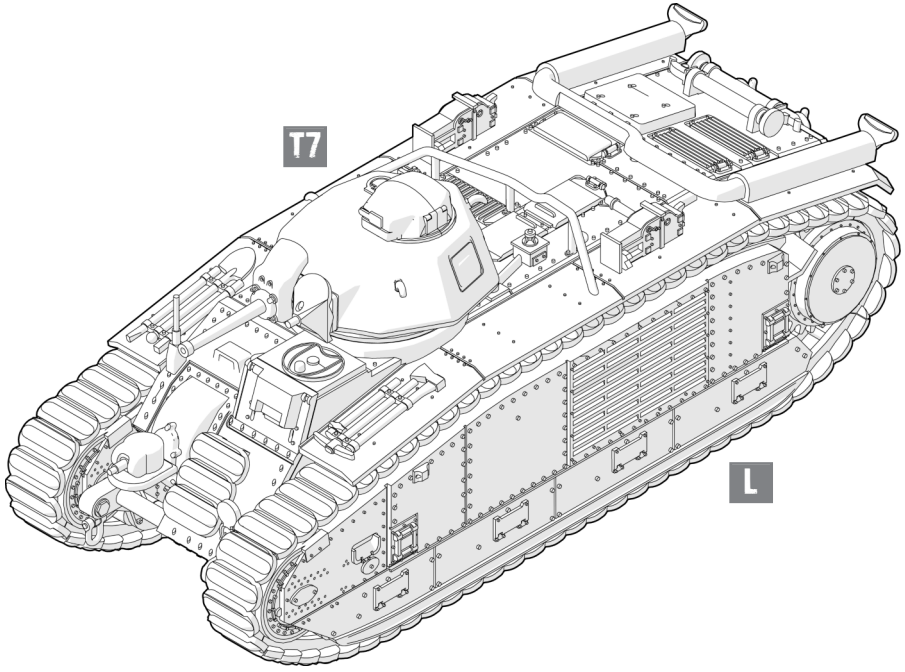

GERMAN FLAMMPANZER 3RD MODEL

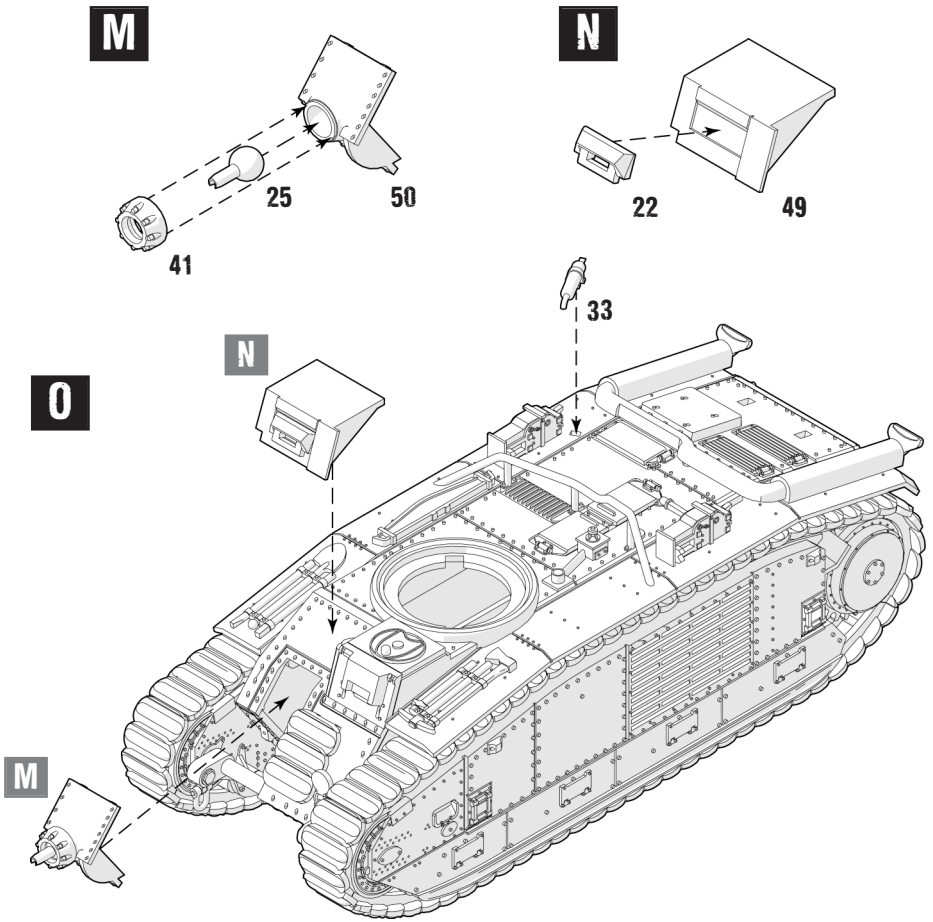

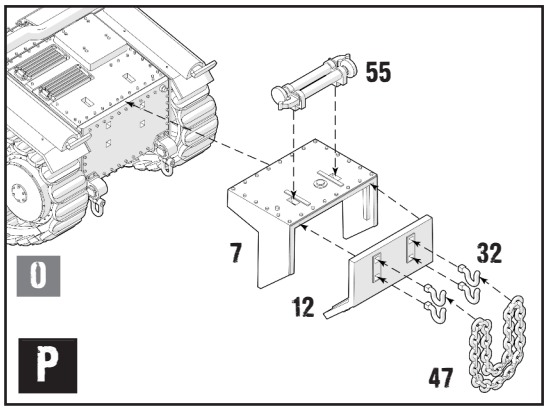

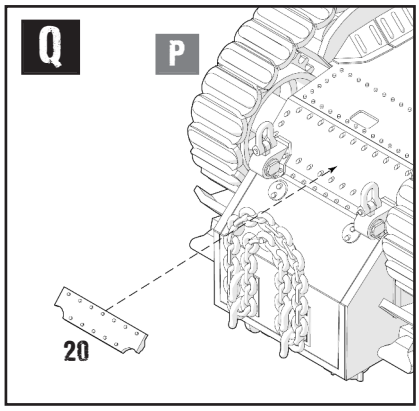

4070600001 Char B1 bis leaflet.qxp 11/10/2017 12:58 Page 13

GERMAN FLAMMPANZER 3RD MODEL VARIANT A

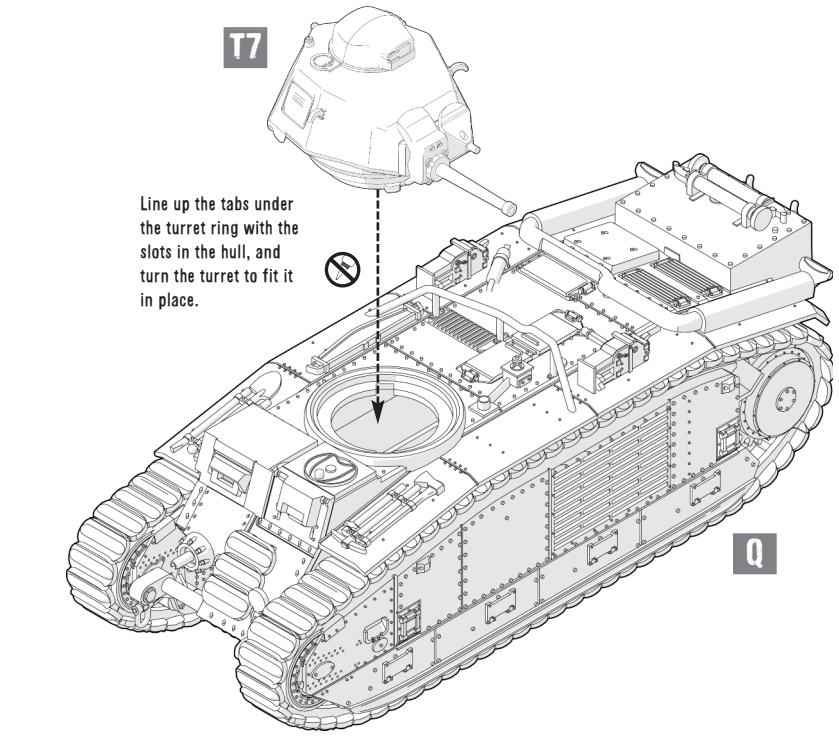

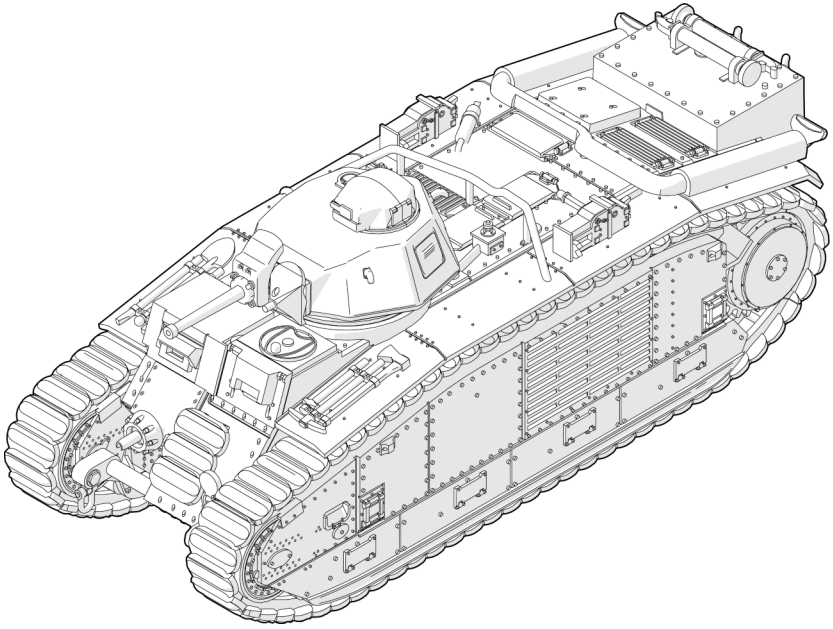

4070600001 Char B1 bis leaflet.qxp 11/10/2017 12:58 Page 14

GERMAN FLAMMPANZER 3RD MODEL VARIANT B

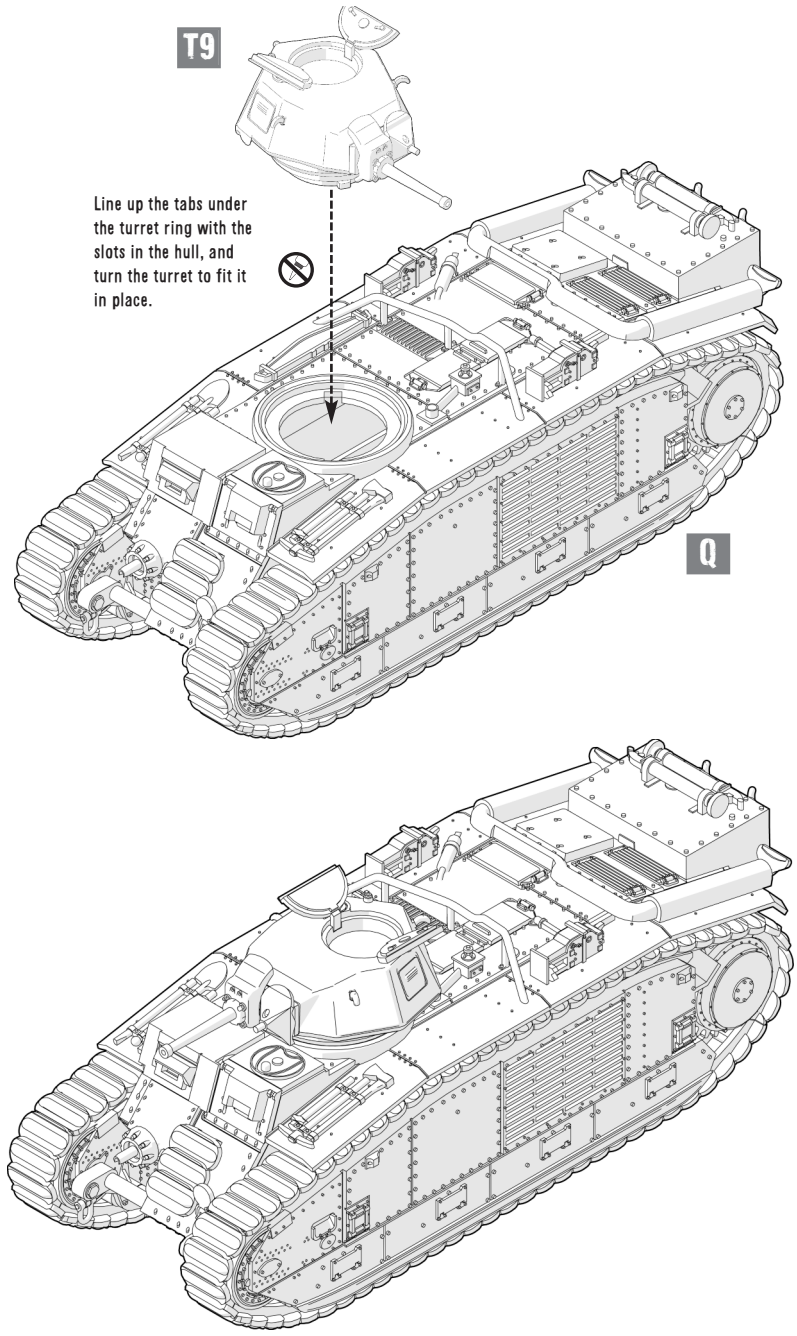

MIX PAINTS:

90% 894 Camo Olive Green

10% 927 Uniform Green

Army Painter Desert Yellow

984 Flat Brown

205 "Indochine", 3rd Company, 15th Combat Tank Battalion, France 1940



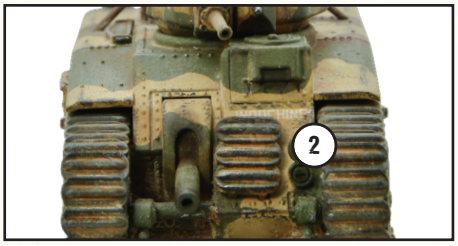

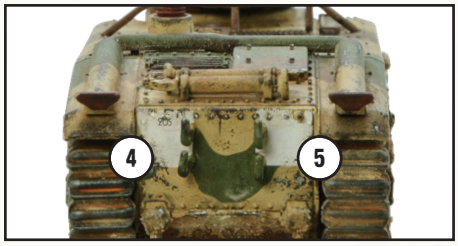

337 "Eure", 1st Company, France 1940 Painted in the colours of famed French tank commander Pierre Bilotte

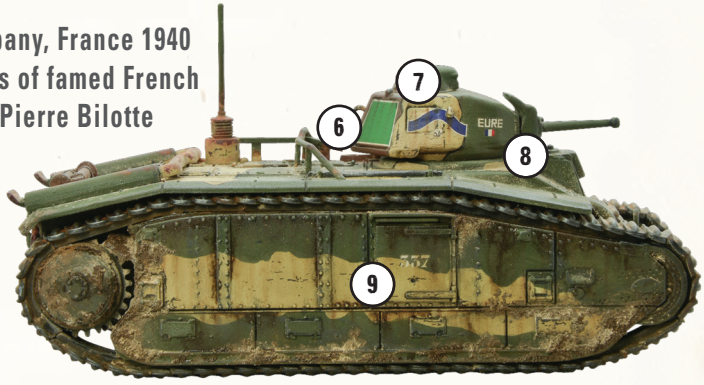

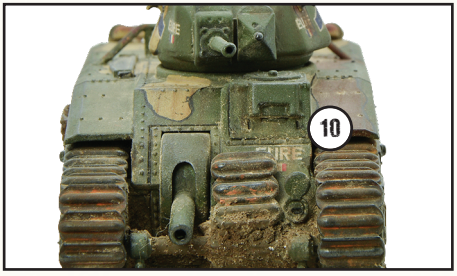

MIX PAINTS:

90% 894 Camo Olive Green

10% 927 Uniform Green

Army Painter Desert Yellow

984 Flat Brown

603 Dunkelgrau
Surface Primer

102 Panzer Division, Russia 1941

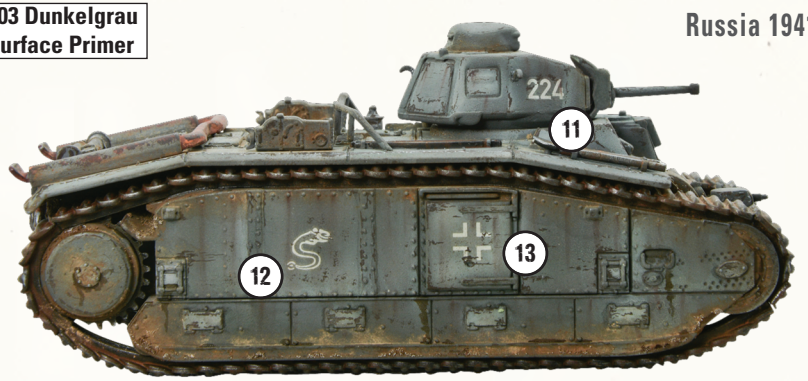

Army Painter Desert Yellow

894 Camo Olive Green

984 Flat Brown

213 Heavy Panzer Battalion, Channel Islands 1944



Army Painter Desert Yellow

894 Camo Olive Green

984 Flat Brown

102 Panzer Division, Normandy 1944

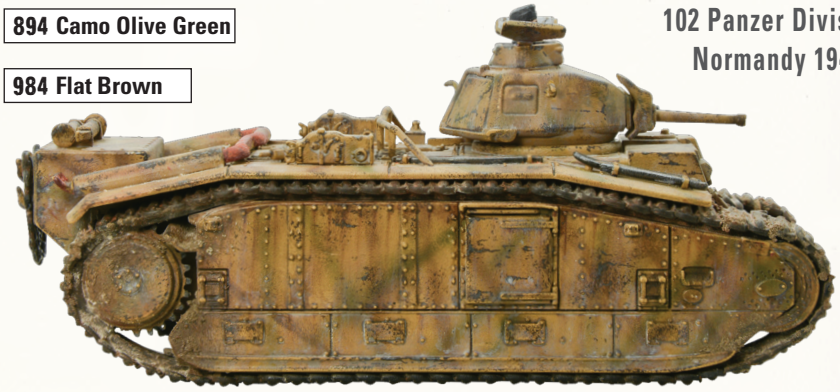

Component code: 4070600001