BOLT ACTION TYPE 3 CHI-NU MEDIUM TANK

ASSEMBLY AND PAINTING GUIDE



As WWII progressed it became clear that the Imperial Japanese Army's main armoured units, the Chi-Ha and Ha-Go, were insufficient to deal with the challenges posed by Allied tanks. The situation was only worsened by the arrival of the American M4 Sherman to the front lines, and so the Imperial General Headquarters decided to develop a new medium tank to replace the ageing Type 97s.

The result was the Type 3 Chi-Nu, an up-gunned and generally improved version of the Chi-Ha. It was armed with the Type 3 75mm tank gun, one of the largest designs of Japanese tank guns of the war, and was protected by up to 50mm of armour.

In actuality the Chi-Nu did not enter production until 1944, and with raw materials in short supply, the very few that were produced were retained for the defence of the Japanese Home Islands as part of a 'Mobile Shock Force', to counterattack any Allied invasion. As it was, the Japanese surrender prevented such an invasion from ever occurring, and the Type 3 Chi-Nu never saw combat.

Type 3 Chi-Nu Medium Tank

Manufacturer:	Mitsubishi Heavy Industries
Produced:	1944 – 1945
No. built:	144 to 166
Armour:	20 on the rear to 50 mm on the front
Top speed:	39 km/h (24 mph)
Weight:	19 tonnes
Length:	5.64 m (18 ft 6 in)
Width:	2.41 m (7 ft 11 in)
Height:	2.68 m (8 ft 10 in)
1st armament:	Type 3 75mm tank gun (L/38), (Armour penetration: 90mm at 100m, 6mm at 1,000m)
2nd armament:	2 x 7.7mm Type 97 machine gun, (1 x AA, 1 x hull)
Engine:	Mitsubishi Type 100 21.7 L V-12 diesel, 240 hp (179 kW) at 2,000 rpm (12.63 hp/tonne)
Range:	210 km (130 mi)
Crew:	Five

WARLORD GAMES
warlordgames.com

ASSEMBLY GUIDE KEY

A	Assembly stage		Do not glue	22	Part number
A	Previous assembly stage	!	Special assembly instructions	?	Optional assembly
	Drill part				

Follow this simple guide to build your Type 3 Chi-Nu Medium Tank.

Carefully remove each component from the frame with clippers or a craft knife. Trim off excess plastic before assembling. Test fit all parts before applying glue.

We recommend using plastic glue to assemble the kit. Please follow all usage and safety advice given on the product.

Keep tools, glues, paints, and small components away from children. Warlord Games recommends this kit for ages 14 and over.

DECAL APPLICATION GUIDE

- Apply a coat of gloss varnish to the areas that will receive the decal and allow this to dry fully.
- Cut out a decal from the sheet and soak it in lukewarm water for 1-2 minutes.
- Once the design has started to separate from the backing paper, use tweezers or a wet paintbrush to slide the design into place on the model.
- Use a tissue to dab away any excess water from the model and allow to dry.
- Apply a coat of matt varnish to seal the decal in place.

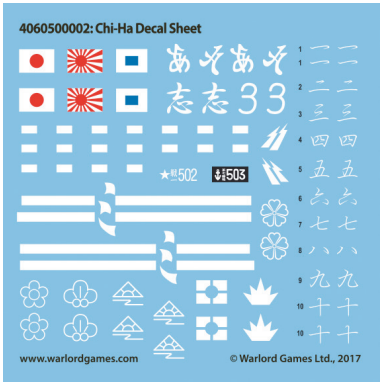

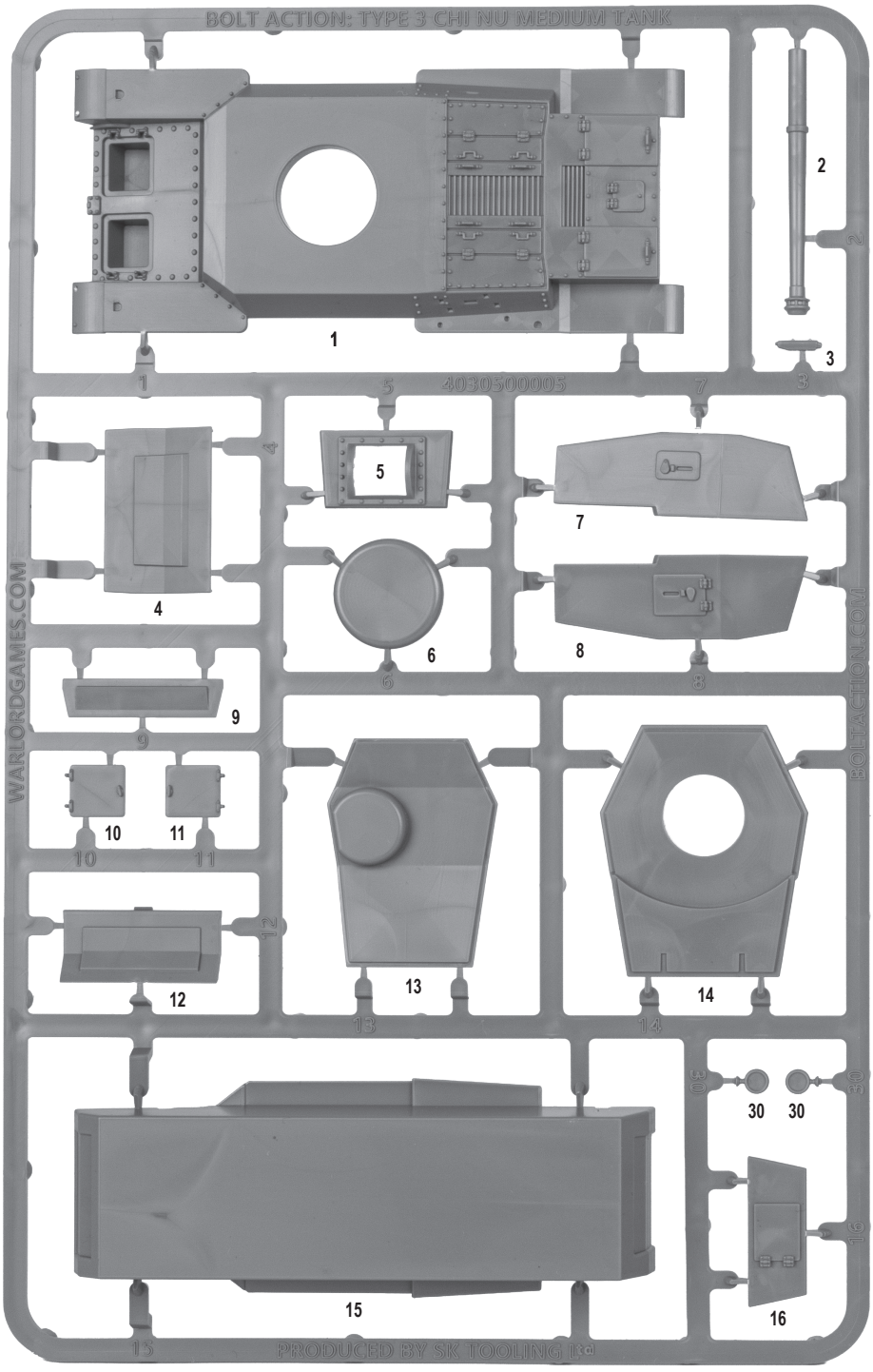
BOLT ACTION: TYPE 3 CHI NU MEDIUM TANK
4030500005
WARLORDGAMES.COM
BOLTACTION.COM
PRODUCED BY SK TOOLING Ltd
1
2
3
4
5
6
7
8
9
10
11
12
13
14
15
16
30
30

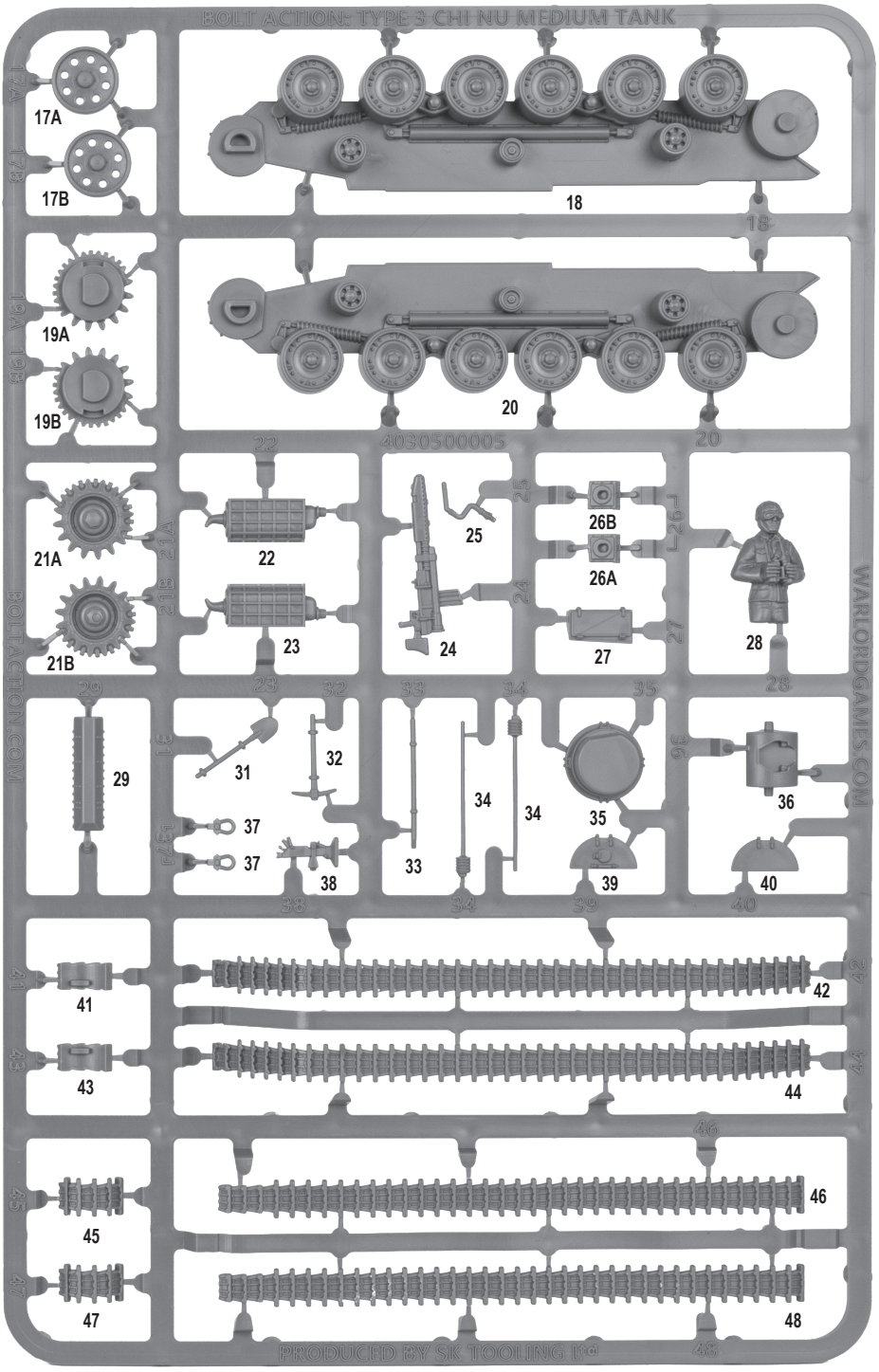
BOLT ACTION: TYPE 3 CHI NU MEDIUM TANK
17A
17B
18
19A
19B
20
4030500005
21A
21B
22
23
24
25
26B
26A
27
28
29
31
32
33
34
35
36
37
38
39
40
41
42
43
44
45
46
47
48
BOLTACTION.COM
WARLORDGAMES.COM
PRODUCED BY SIK TOOLING LTD

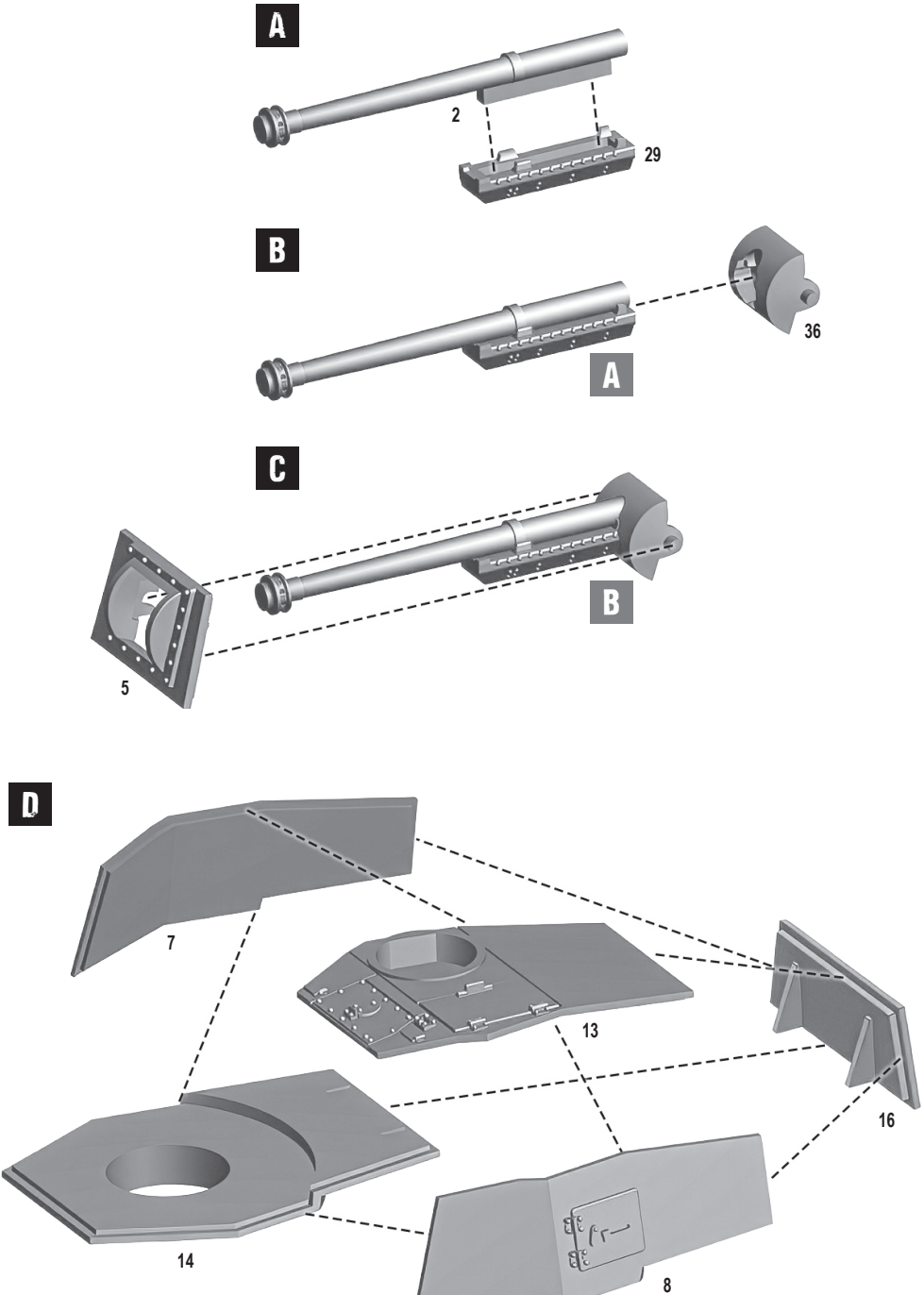
A
2
29
B
36
A
C
5
B
D
7
13
16
14
8

E

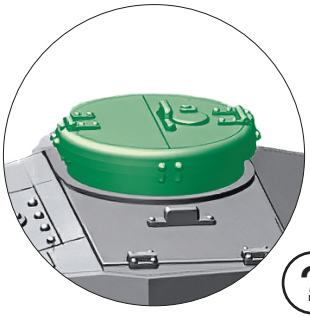

Optional closed hatch

F

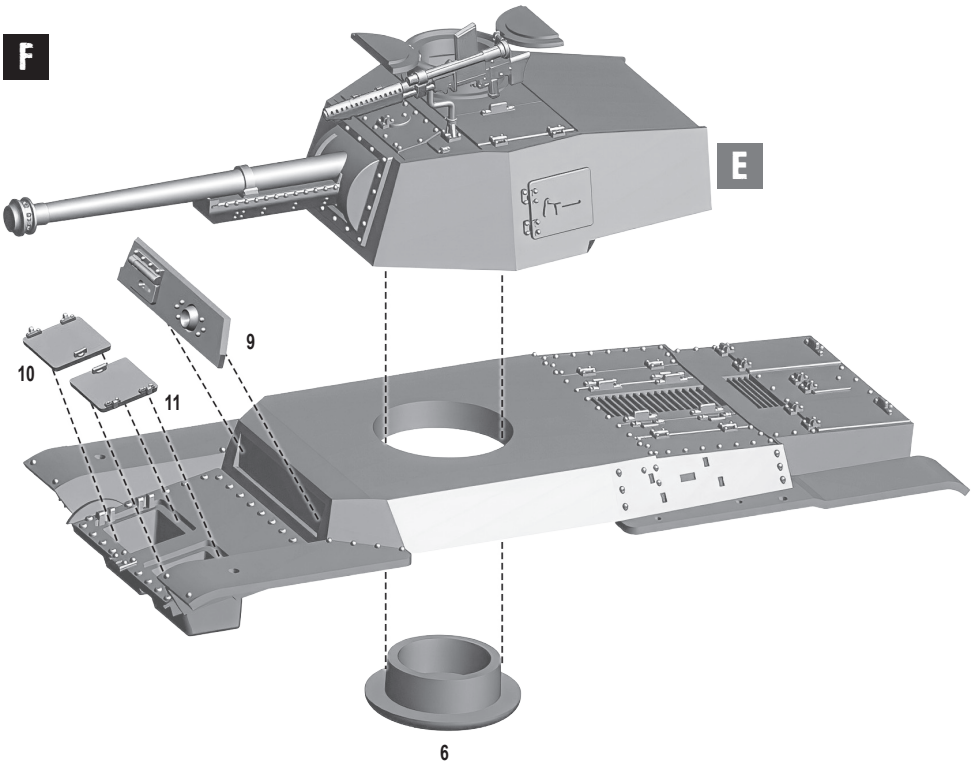

G Do not glue part 1 to part 15 until turret is fitted (see previous step).

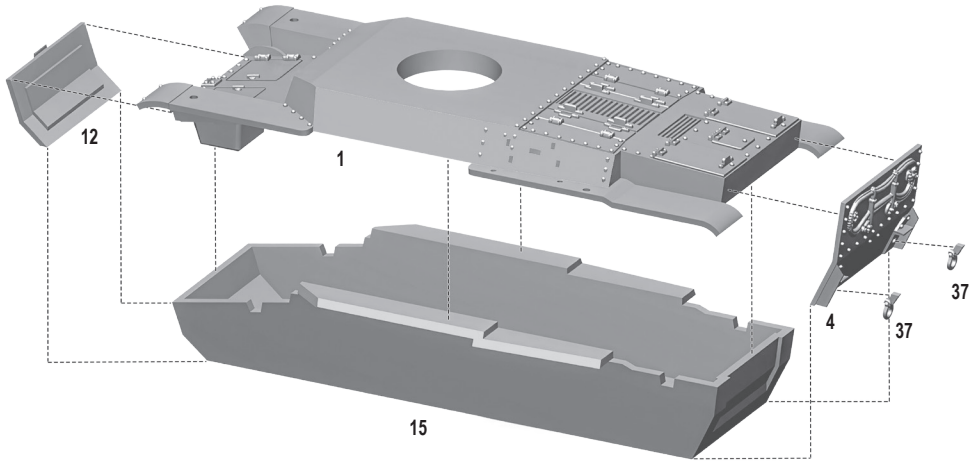

H Repeat these step for right-hand side of the tank.

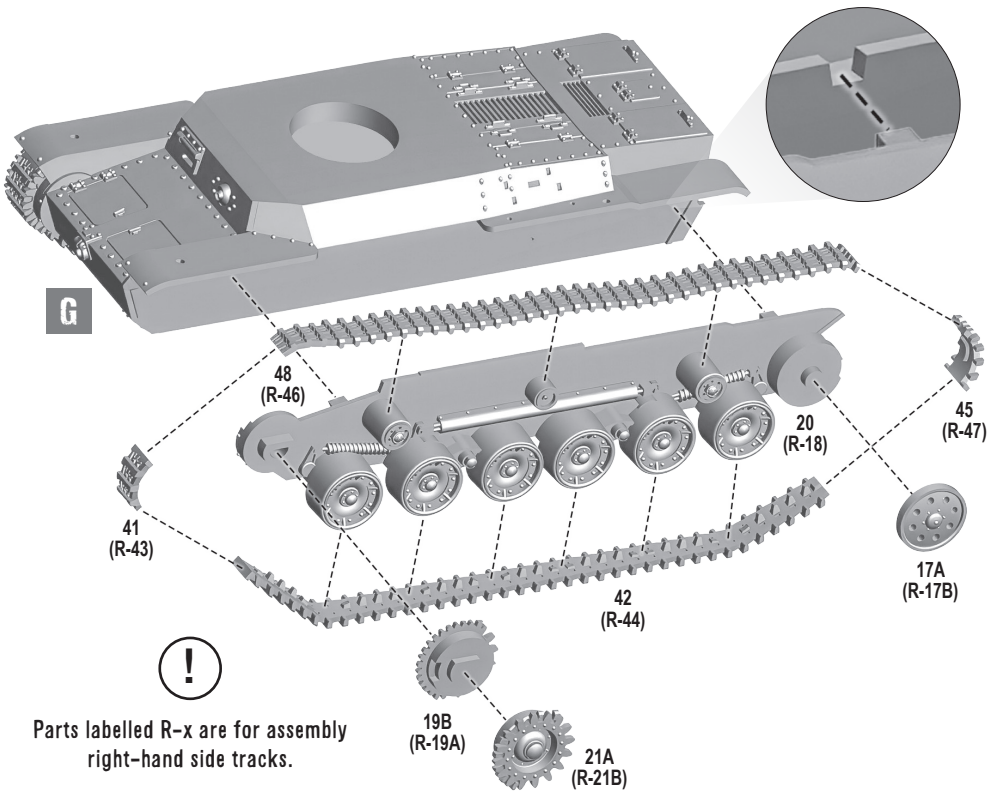

Parts labelled R-x are for assembly right-hand side tracks.

I

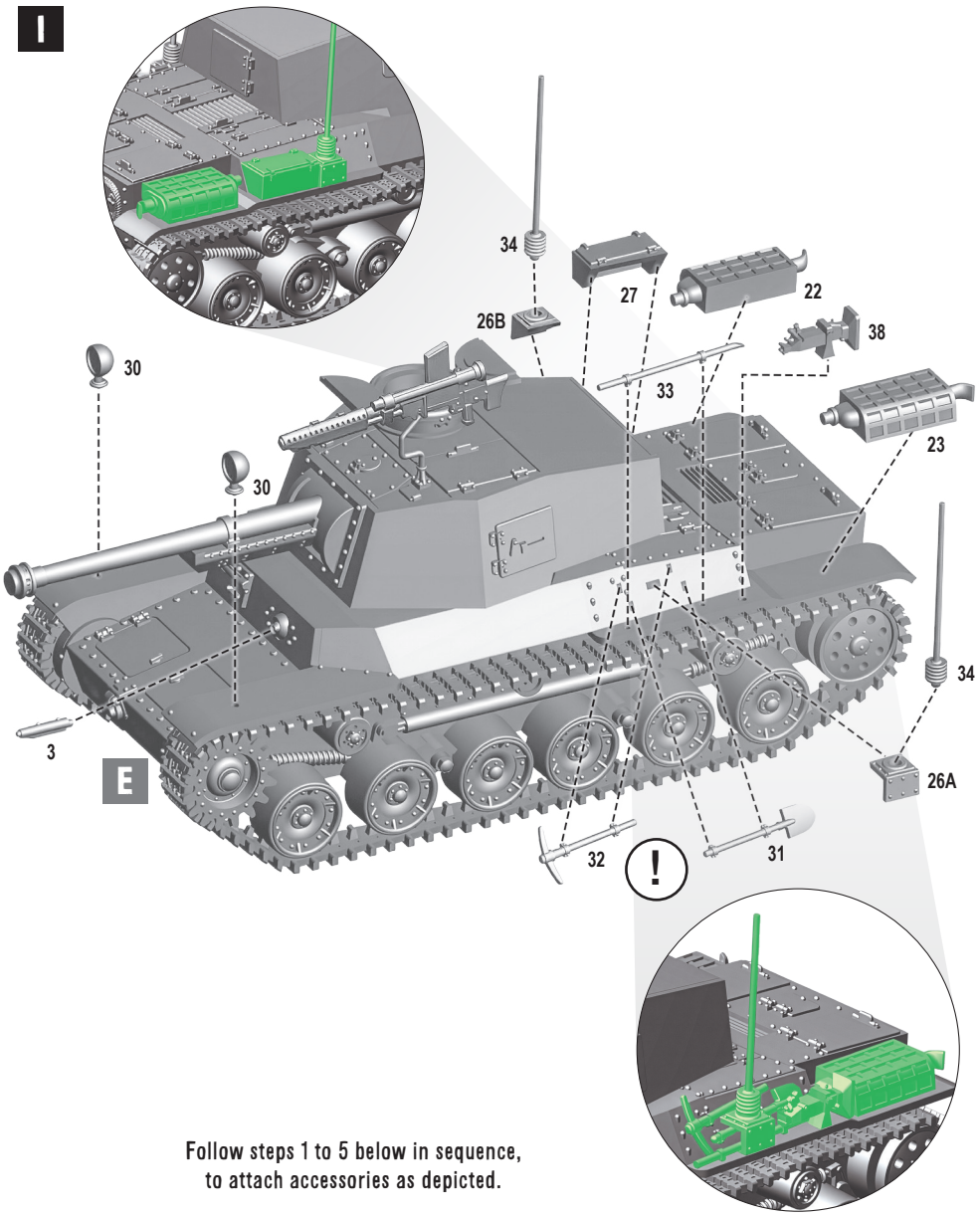

Follow steps 1 to 5 below in sequence,
to attach accessories as depicted.

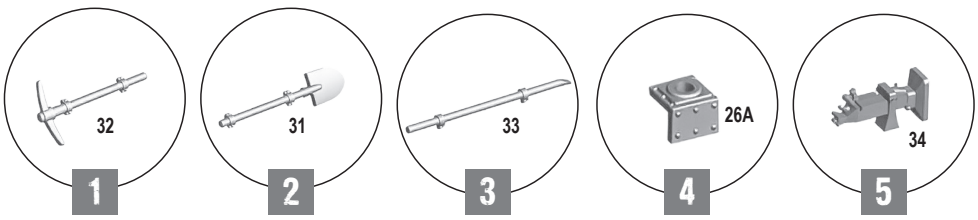

AK 11427 Green Uniform Base

4th Tank Division based in Fukuoka
on Kyushu, 1945





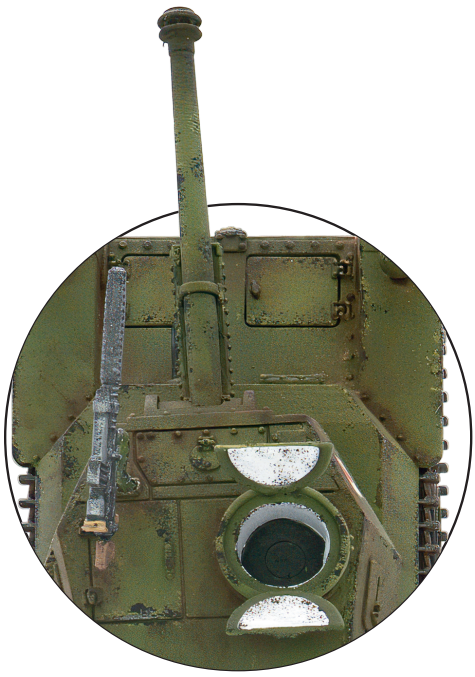





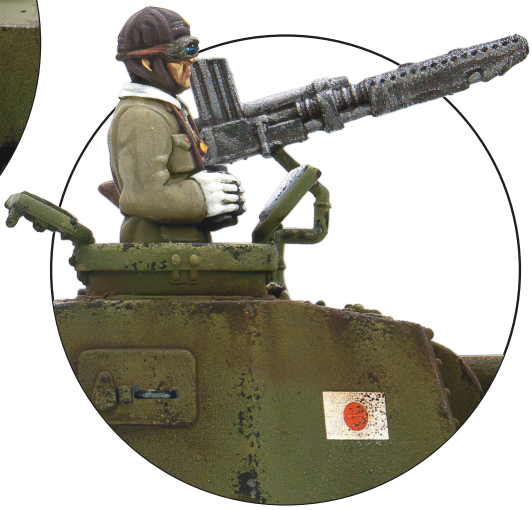

	AK 11440 Desert Uniform Base
	AK 11117 Golden Brown
	AK 11330 Rotbraun

Defence Force,
Japan, 1945





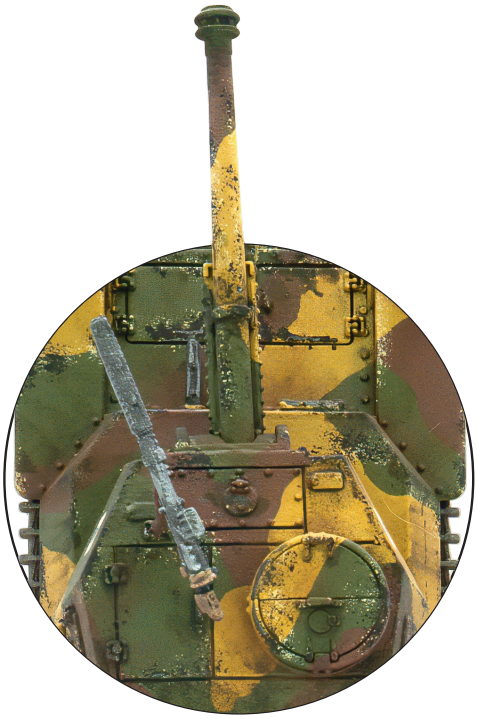







Component code: **4070500006**