4070400002_IS-2 booklet.qxp 26/10/2022 13:16 Page 1

World War II Wargame
BOLT ACTION
www.boltaction.com

IS-2 HEAVY TANK

ASSEMBLY AND PAINTING GUIDE



Most properly known as the Iosif Stalin 2 (IS-2) this late war Soviet heavy tank is widely known as the anglicised Joseph Stalin 2 (JS-2).

Used to reinforce the most vital areas of the Soviet attack they would support the infantry during assaults, destroying fortifications, crew-served weapons, etc. with their devastating high explosive shells. Once the breakthrough had been achieved, lighter tanks would rush through to exploit the breach and cause havoc in the enemy lines.

Making it's combat debut early in 1944, the IS-2 was able to withstand the potent German anti-tank weaponry and it's 122mm gun able to defeat the likes of the fearsome German Panther and Tiger tanks.

Assigned to elite Guards heavy tank regiments, the IS-2 led the way into the shattered remains of Berlin during the last days of Hitler's Third Reich, taking on even the mighty German King Tiger.

One of the enduring images of the Soviet army in WWII is their tanks speeding along carrying Soviet soldiers. These tank riders offered valuable protection from enemy infantry in a truly symbiotic relationship and we have included a sprue of plastic Soviet infantry for just this purpose!.

IS-2 Heavy Tank

No. produced:	3,854
Crew:	4
Powerplant:	Model V-2 V12 Diesel (600 hp)
Top speed:	37 kph
Range:	240 km
Armament:	D25-T 122mm gun 3 DT machine guns
Armour:	60-110 mm
Weight:	46 tonnes

WARLORD GAMES
warlordgames.com

4070400002_IS-2 booklet.qxp 26/10/2022 13:16 Page

ASSEMBLY GUIDE KEY

A Assembly stage	Do Not Glue	22 Part number
A Previous assembly stage	! Special assembly instructions	3 Decal number
? Optional assembly	Drill part	987 Paint number (Vallejo)

Follow this simple guide to building your IS-2 heavy tank.

Carefully remove each component from the frame with clippers or a craft knife. Trim off excess plastic before assembling. Test fit all parts before applying glue.

We recommend using polystyrene cement to assemble the kit, and to use this in a well-ventilated area.

Keep tools, glues, paints and small components away from children. Warlord Games recommend this kit for ages 14 and over.

DECAL APPLICATION GUIDE

- Apply a coat of gloss varnish to the areas that will receive the decal and allow this to dry fully.
- Cut out a decal from the sheet and soak it in luke warm water for 2-3 minutes.
- Once the design has started to separate from the backing paper, use tweezers or a wet paintbrush to slide the design into place on the model.
- Use a tisue to dab away any excess water from the model, and allow to dry.
- Apply a coat of matt varnish to seal the decal in place.



4070400002_IS-2 booklet.qxp 26/10/2022 13:16 Page 3

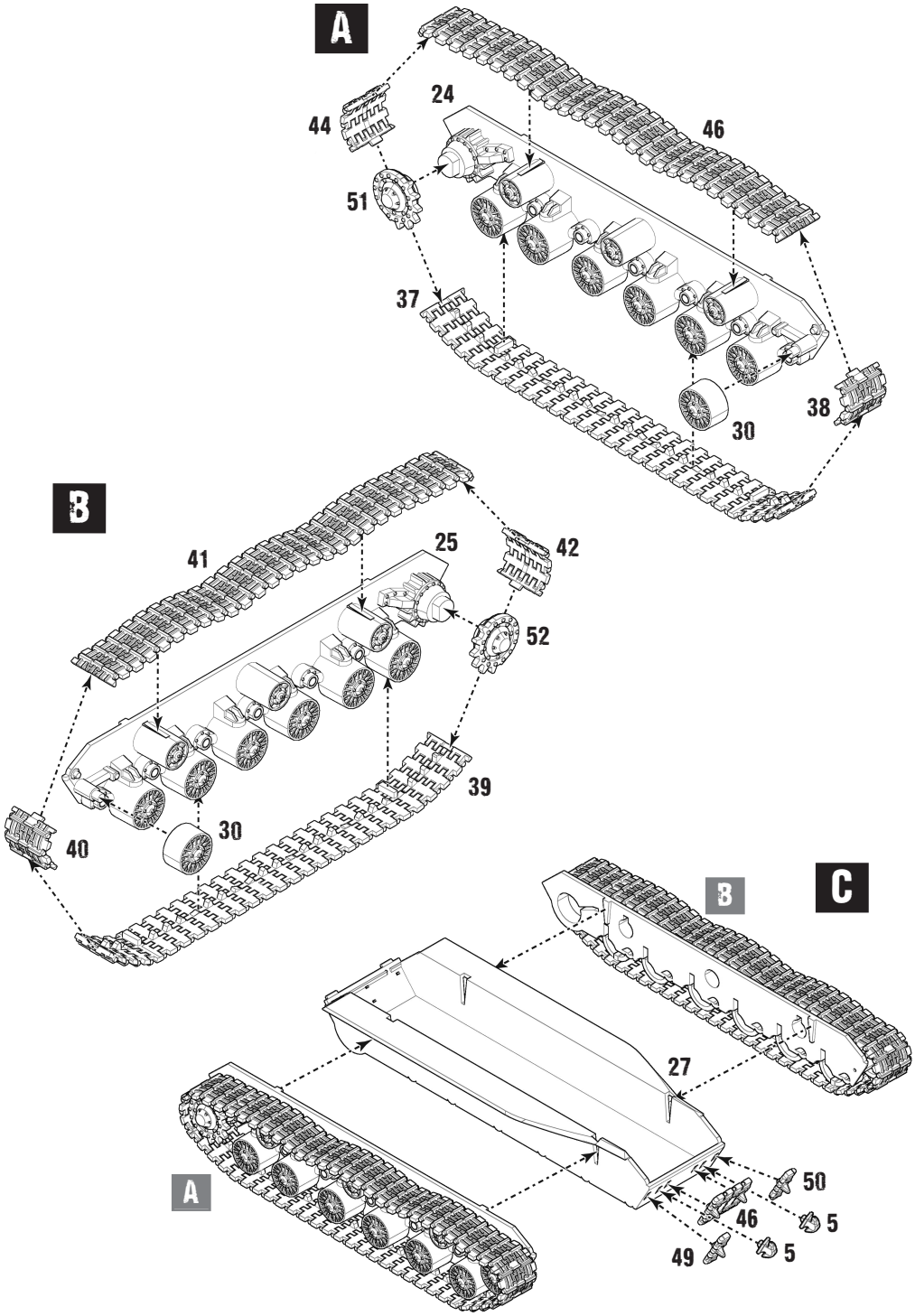

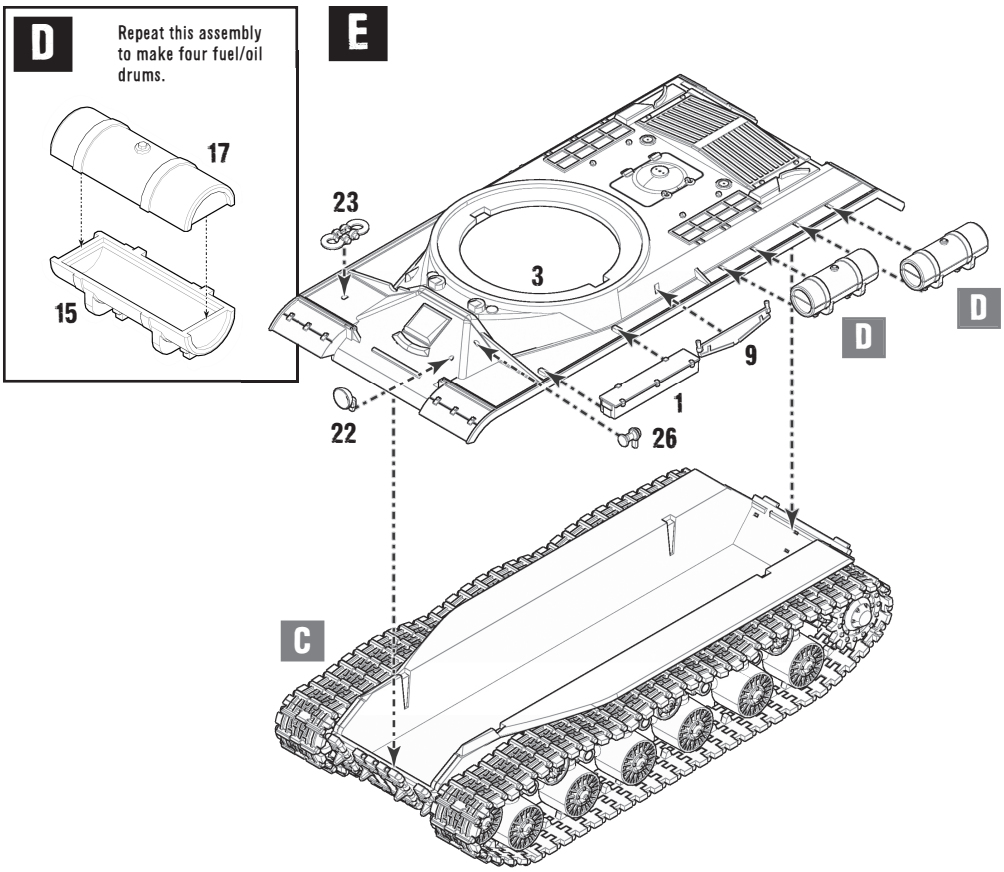
D
Repeat this assembly to make four fuel/oil drums.
17
15
E
23
3
D
D
9
1
22
26
C

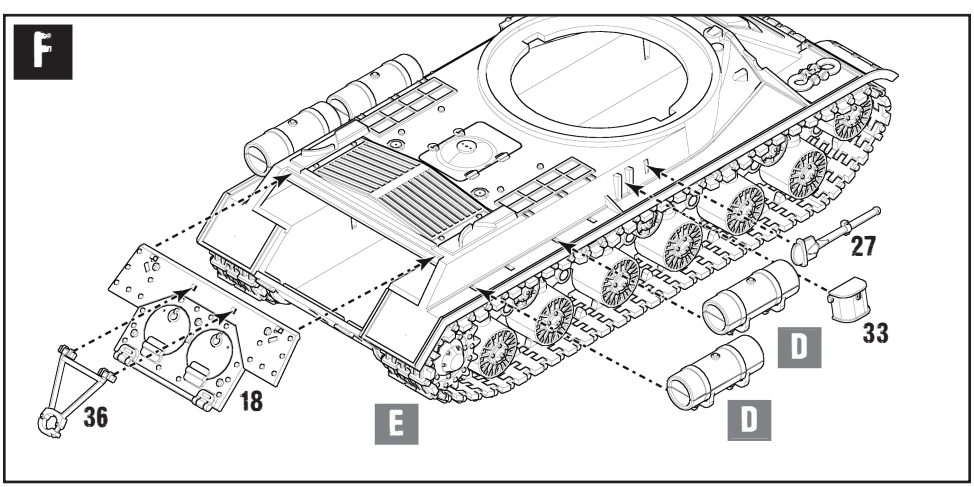
F
27
33
D
D
36
18
E

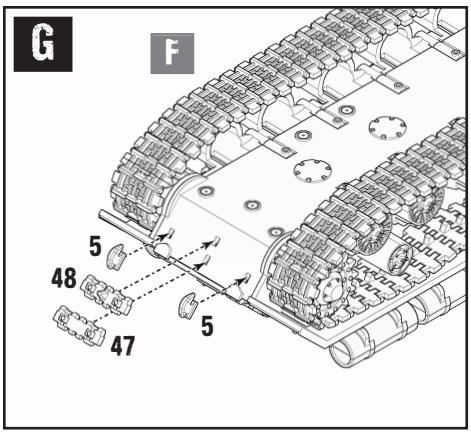
G
F
5
48
47
5

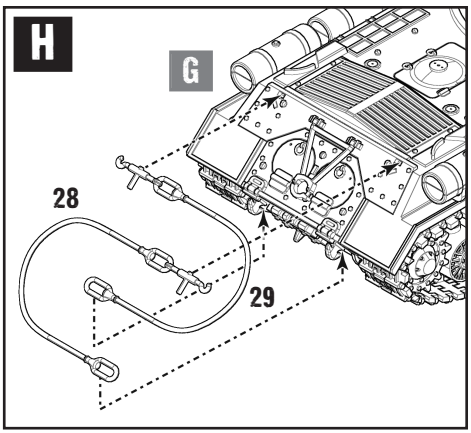
H
G
28
29

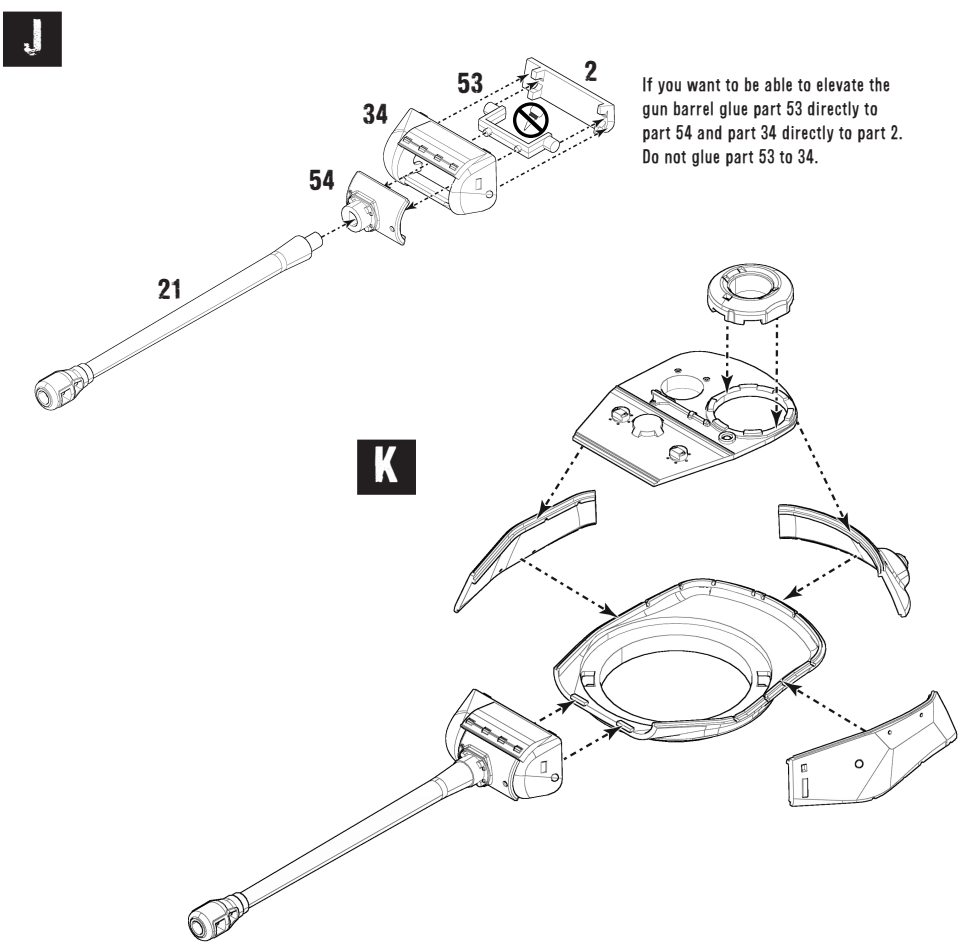
J
53
2
34
54
21
If you want to be able to elevate the gun barrel glue part 53 directly to part 54 and part 34 directly to part 2. Do not glue part 53 to 34.
K

4070400002_IS-2 booklet.qxp 26/10/2022 13:17 Page 4

L

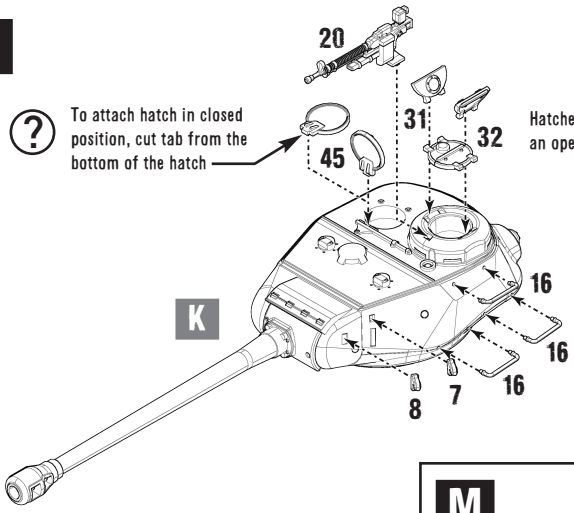

To attach hatch in closed position, cut tab from the bottom of the hatch

Hatches can be assembled in an open or closed position.

The Soviet tank commander can be placed in the open hatches.



M

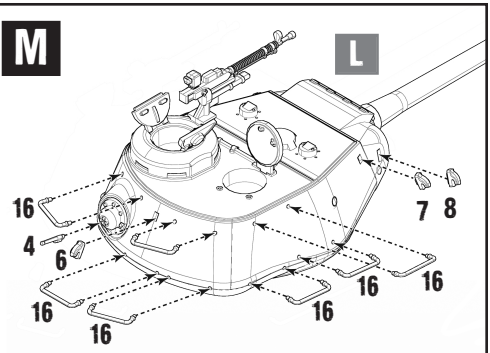

N

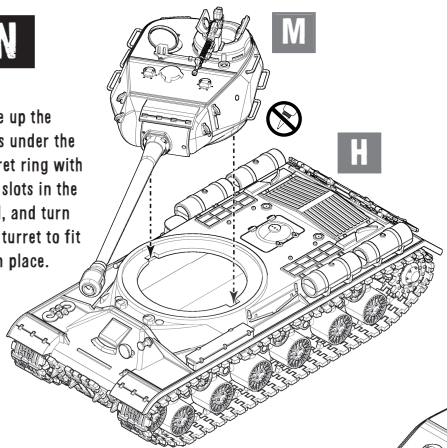

Line up the tabs under the turret ring with the slots in the hull, and turn the turret to fit it in place.

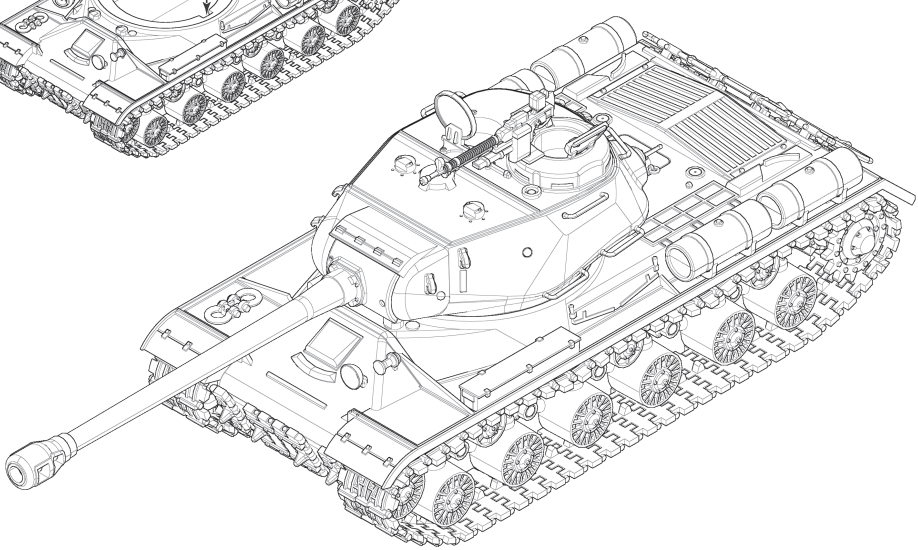

IS-2 model 1944, 'Combat Girlfriend'
7th Independent Guards Heavy Tank Battalion,
Berlin, April 1945.

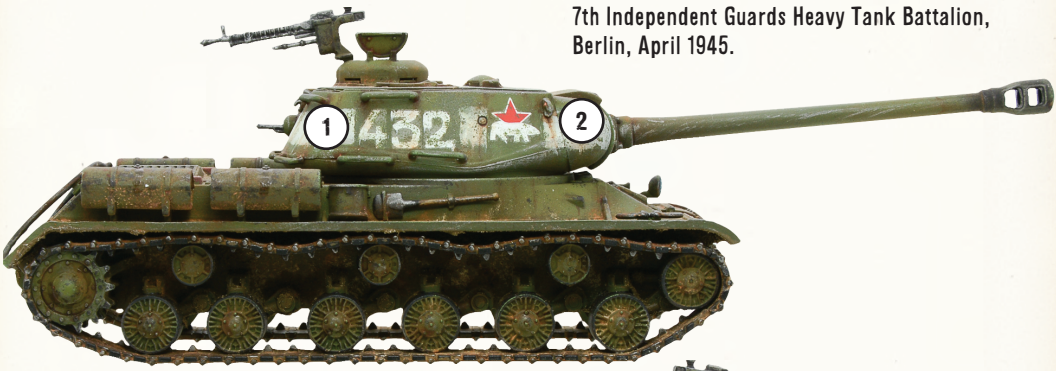



888 Olive Grey



6 441 This can be used as an alternative to 1

15 БОЕВАЯ ПОДРУГА

16 БОЕВЫЕ ДРУЗЬЯ

17 МОСКВА

Tank crews would sometimes paint slogans on on the rear of their turret.



The slogan on this famous tank reads 'Revenge for Hero Brother'



10 Месть 49 3004 За брата Героя

9 49 3004

4070400002_IS-2 booklet.qxp 26/10/2022 13:17 Page 3

13th Guards Heavy
Breakthrough Tank Regiment,
Southern Ukraine, Winter 1943/44

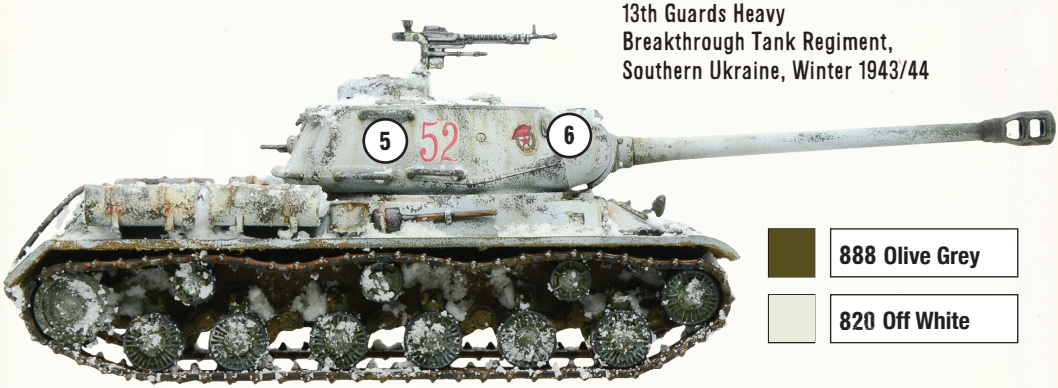

888 Olive Grey

820 Off White

Polish 4th Heavy Tank Regiment,
Germany, April 1945



888 Olive Grey

1st Czechoslovak Tank Brigade,
Prague, May 1945



11 113

12

IS-2, winter 1943-44,
Vitebsk sector.

13 14

JS 2 model 1944,
Eastern Germany 1945

14 27

0 0 0 0 1 1 1 1 1 2 2 2 2 3 3
3 3 4 4 5 5 6 6 7 7 8 8 9 9

Other numbers and stars on the decal sheet can be used to create your own unique set of markings, and can be combined with the range of Soviet decal sheets available directly from Warlord Games, or from your local retailer.

Component code: **4070400002**