BOLT ACTION

PANZER II LIGHT TANK

ASSEMBLY AND PAINTING GUIDE



The Panzer II was the most numerous German tank at the start of World War II, and thus formed the backbone of the Panzer divisions made legendary in the Blitzkrieg campaigns across Western Europe. Lightly armed and armoured, and already technologically outclassed by heavier vehicles, it nonetheless gave good service, particularly against enemy infantry. Panzer IIs saw extensive service in Europe and North Africa in the early part of the war, and would also play a significant role in Operation *Barbarossa*, the invasion of the Soviet Union. Replaced in frontline service by the larger and more modern Panzer III and IV, some Panzer IIs remained in service with training units and second-line formations until the end of the war. The chassis was also used to produce a number of light tank destroyers and self-propelled guns.

This kit contains one hard plastic Panzer II light tank, including multiple options for commanders, a decal sheet, and damage markers. This highly detailed model kit is an ideal addition to early-war German *Bolt Action* forces.

Panzer II

Manufacturer:	MAN Daimler-Benz FAMO Wegmann MIAG
Produced:	1935 – 1942
No. built:	Approx. 1,856
Variants:	Ausf. A, B, C
Armour:	Front, 14.5 mm (early variants), up to 30 mm front (later variants such as Ausf. F), 14.5 mm sides and rear
Top speed:	25 mph (40 km/h) (road), 12–16 mph (20–25 km/h) (off-road)
Length:	15 ft 7 in (4.81 m)
Width:	7 ft 3 in (2.22 m)
Height:	6 ft 6 in (1.99 m)
Armament:	1 × 2 cm KwK 30 L/55 autocannon, 1 × 7.92 mm MG34 machine gun
Range:	Road: 120 mi (190 km) Cross country: 78 mi (126 km)
Crew:	Three

WARLORD GAMES
warlordgames.com

ASSEMBLY GUIDE KEY

A — Assembly stage

A — Previous assembly stage

Drill part

Do not glue

! — Special assembly instructions

22 — Part number

? — Optional assembly

Follow this simple guide to build your Panzer II light tank.

Carefully remove each component from the frame with clippers or a craft knife. Trim off excess plastic before assembling. Test fit all parts before applying glue.

We recommend using plastic glue to assemble the kit. Please follow all usage and safety advice given on the product.

Keep tools, glues, paints, and small components away from children. Warlord Games recommends this kit for ages 14 and over.

DECAL APPLICATION GUIDE

- Apply a coat of gloss varnish to the areas that will receive the decal and allow this to dry fully.
- Cut out a decal from the sheet and soak it in lukewarm water for 1-2 minutes.
- Once the design has started to separate from the backing paper, use tweezers or a wet paintbrush to slide the design into place on the model.
- Use a tissue to dab away any excess water from the model and allow to dry.
- Apply a coat of matt varnish to seal the decal in place.

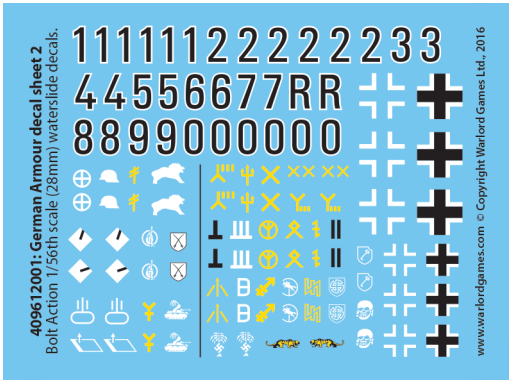

Sprue A

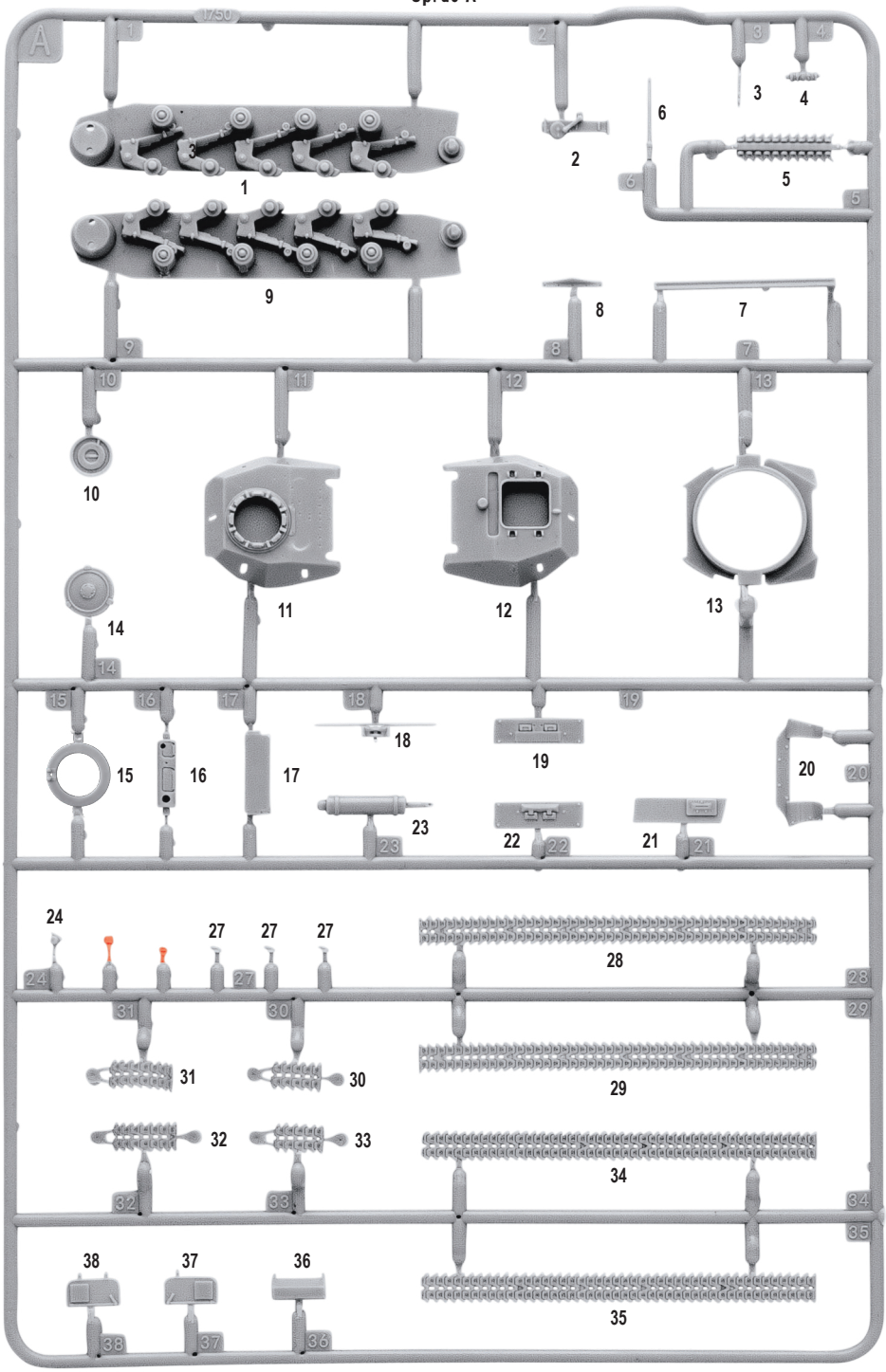

Components marked in red are not required to build the Panzer II light tank.

Sprue B

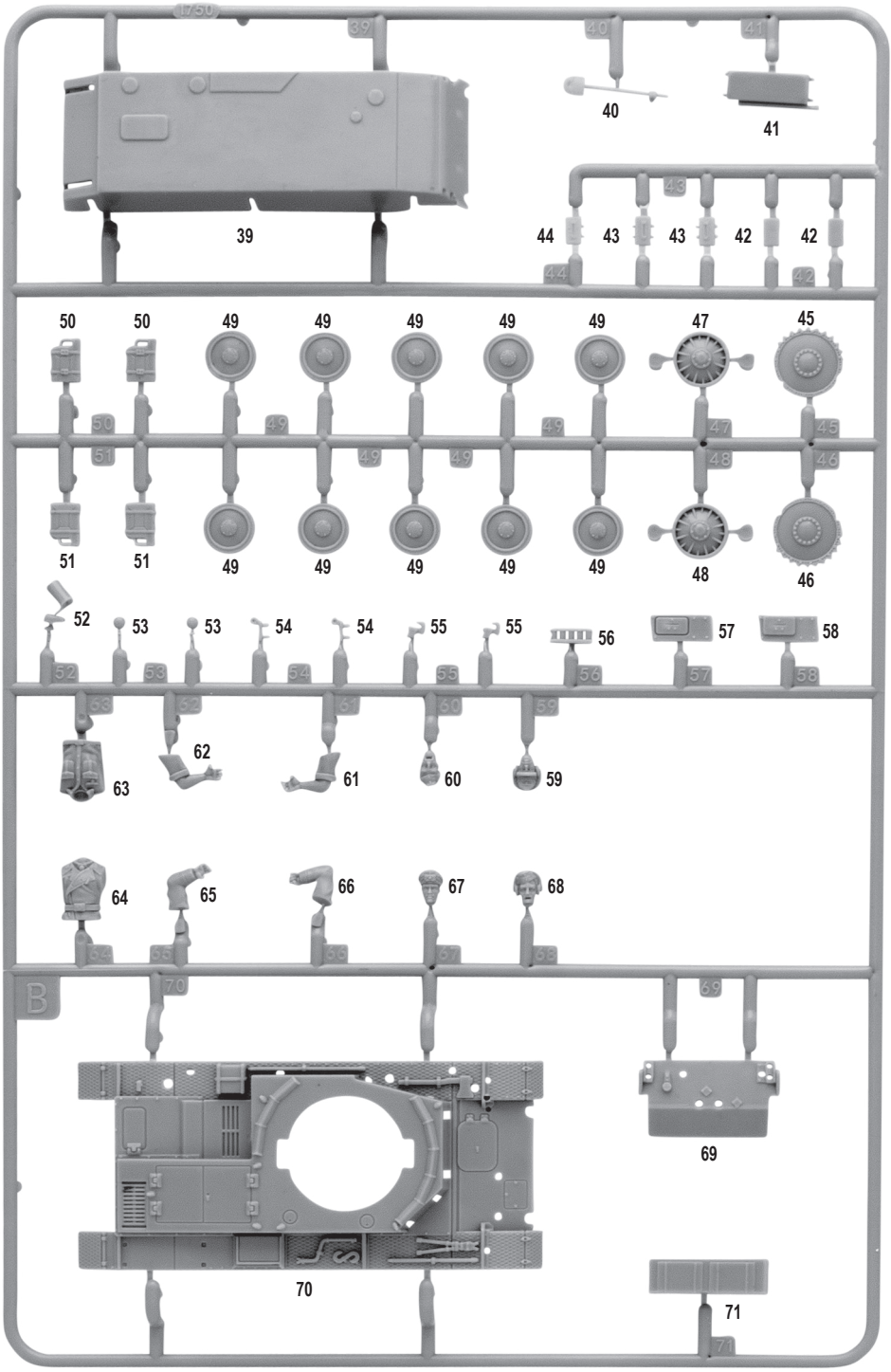
B
39
40
41
42
43
44
45
46
47
48
49
50
51
52
53
54
55
56
57
58
59
60
61
62
63
64
65
66
67
68
69
70
71

A Right-hand track unit

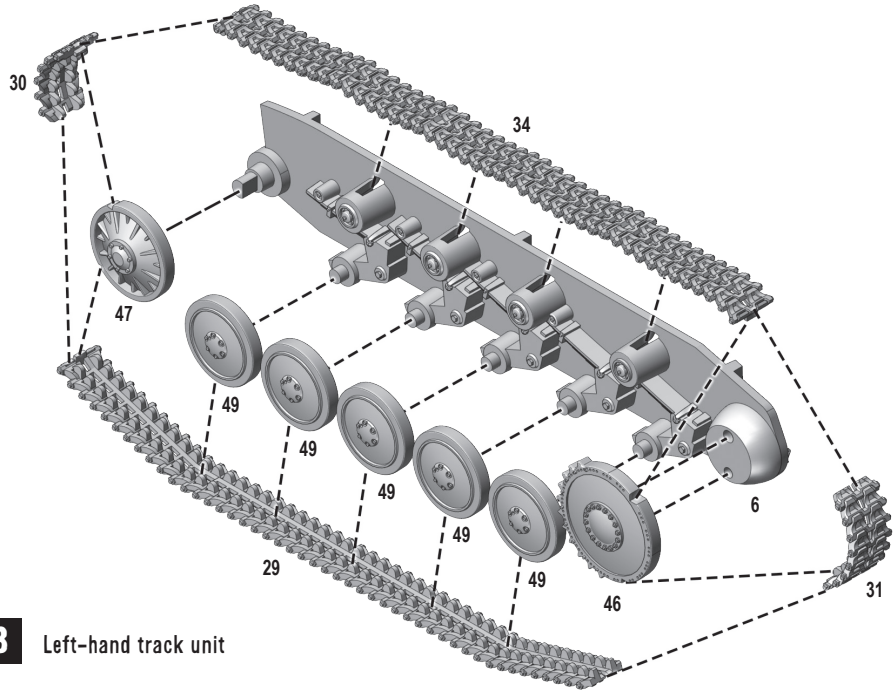

B Left-hand track unit

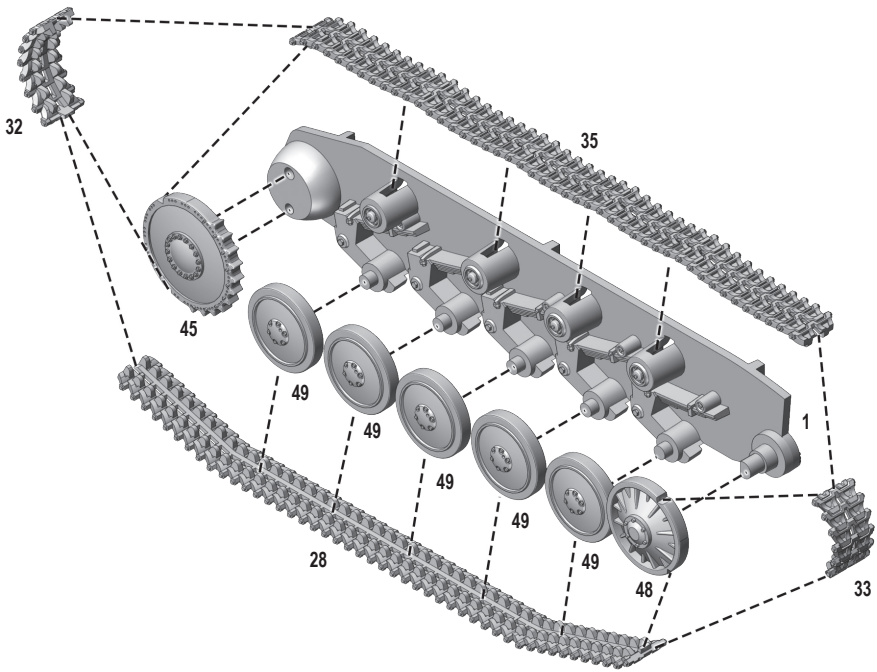

C

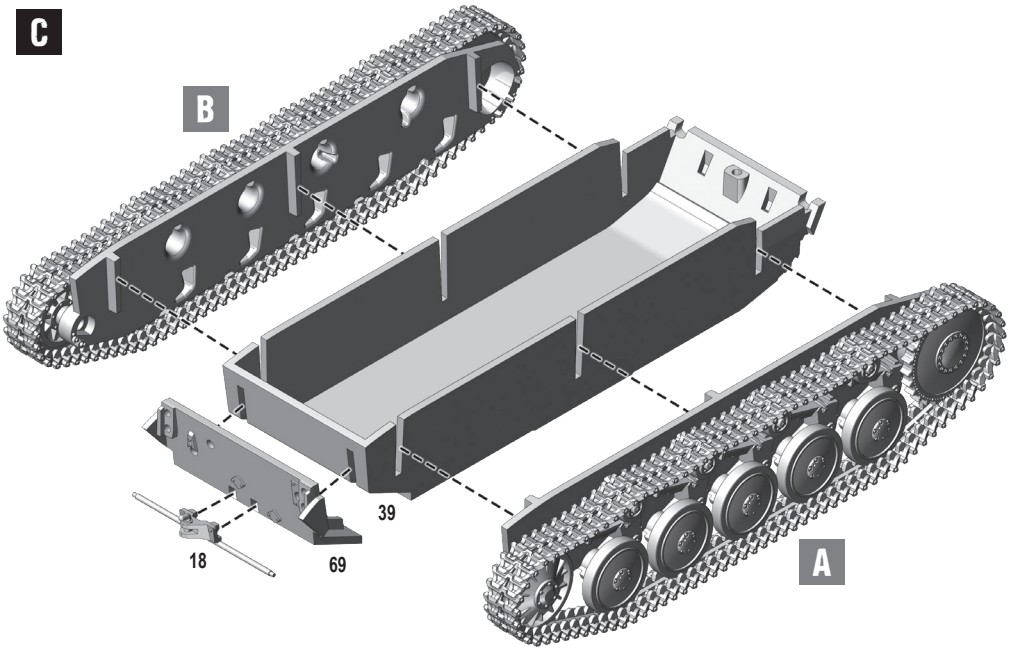

D

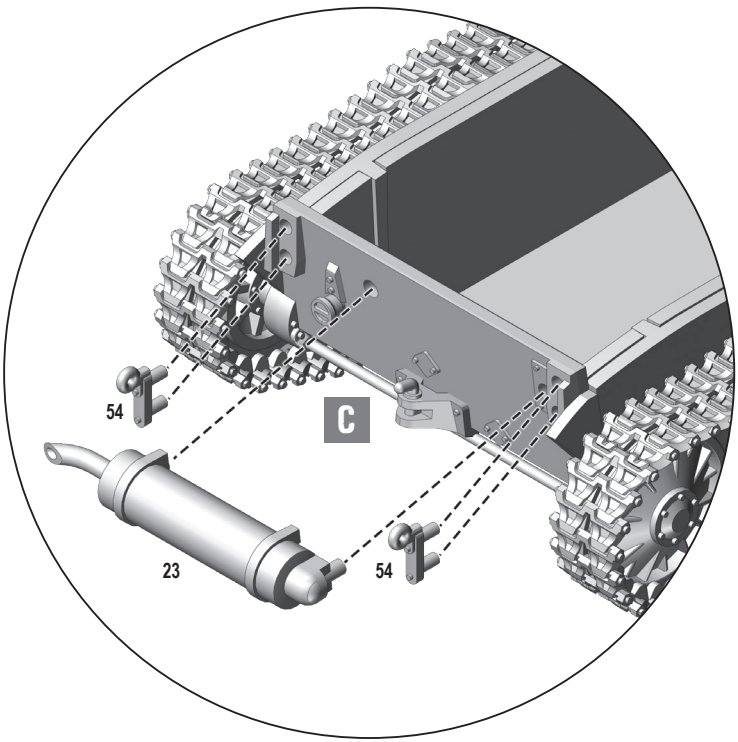

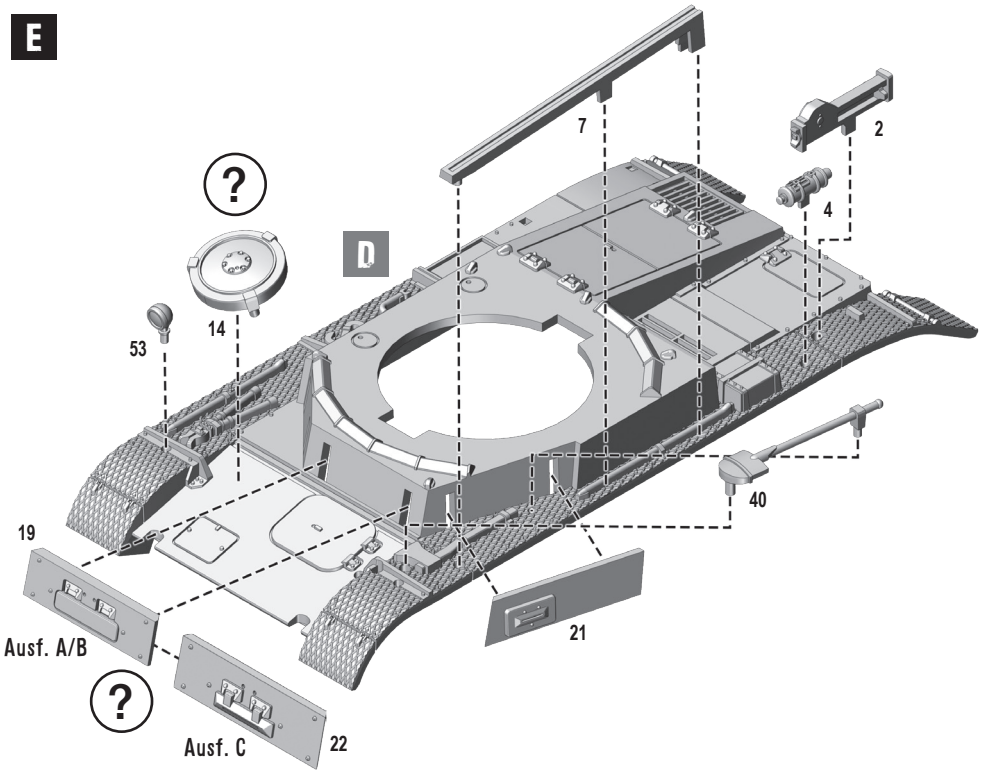
E
7
2
?
4
D
14
53
40
19
21
Ausf. A/B
?
Ausf. C
22

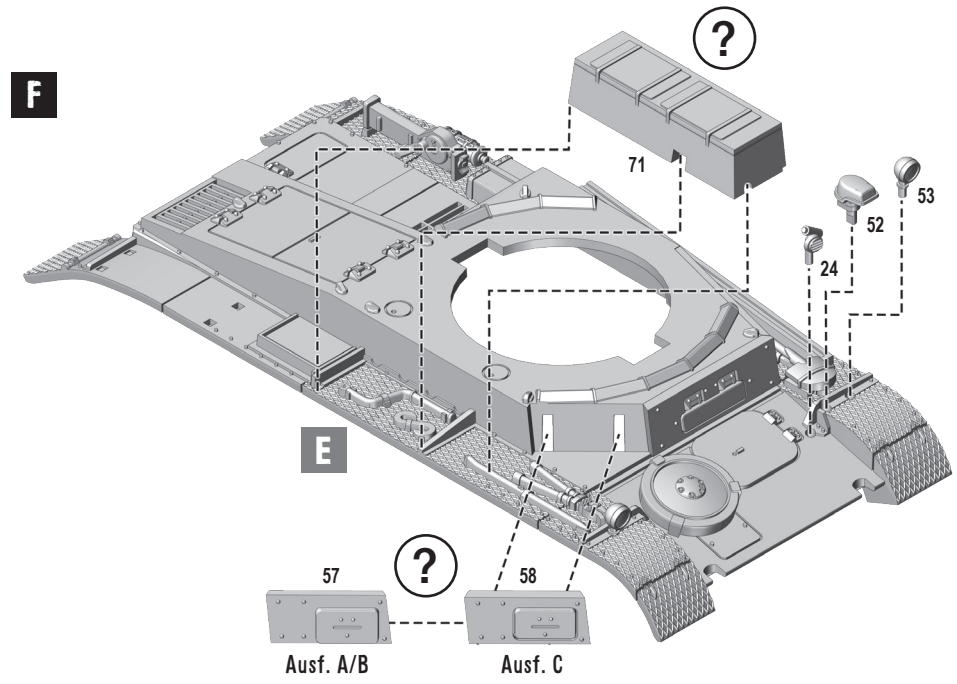
F
?
71
53
52
24
E
57
?
58
Ausf. A/B
Ausf. C

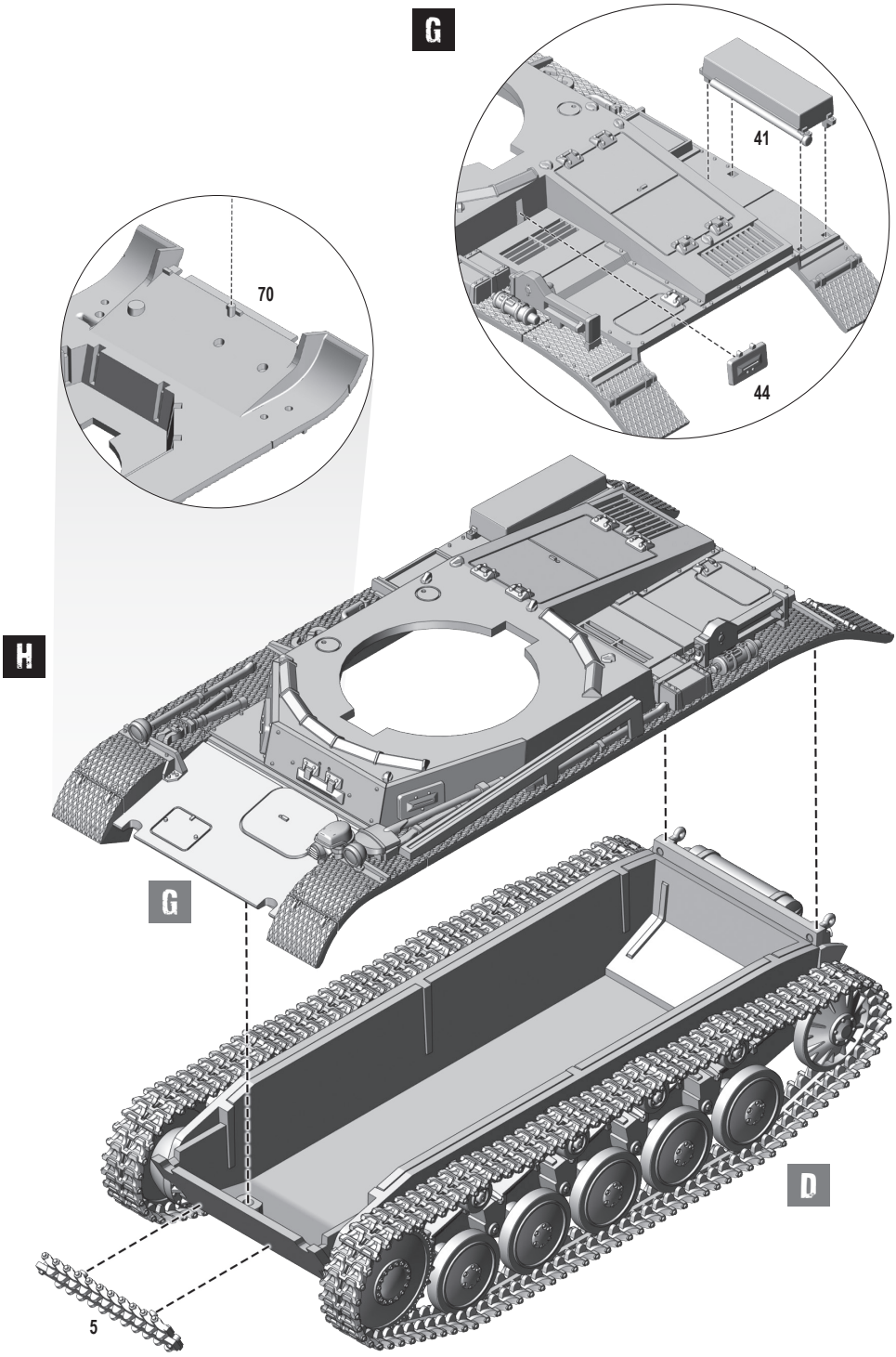
G
41
44
70
H
G
D
5

I Optional smoke grenade dispenser

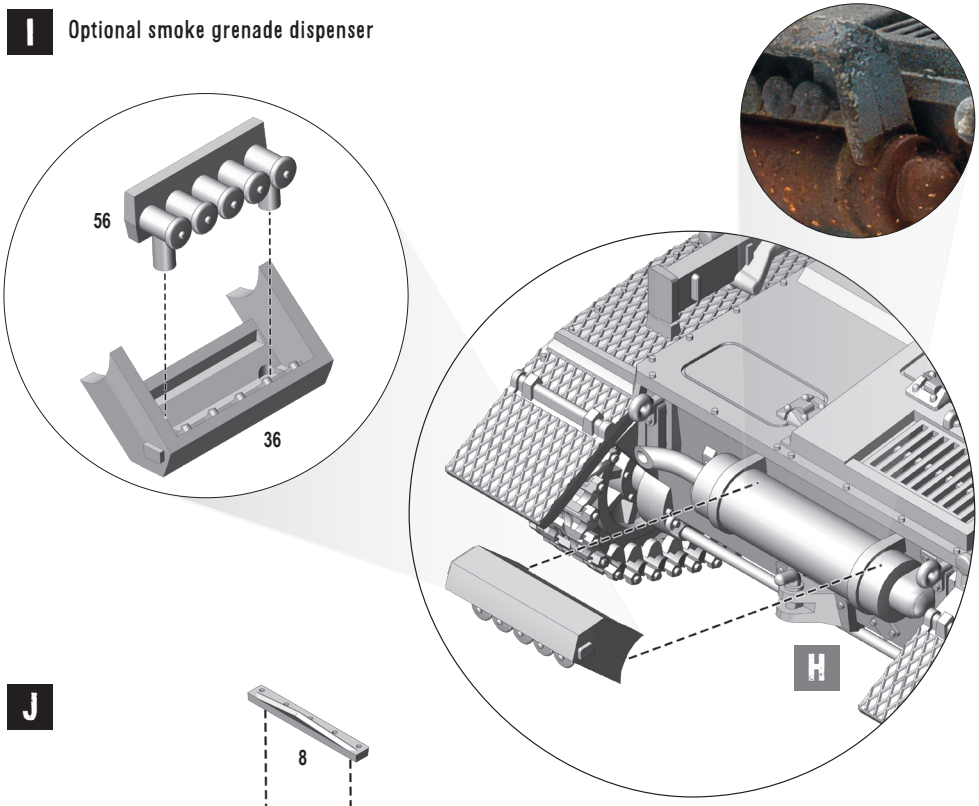

J

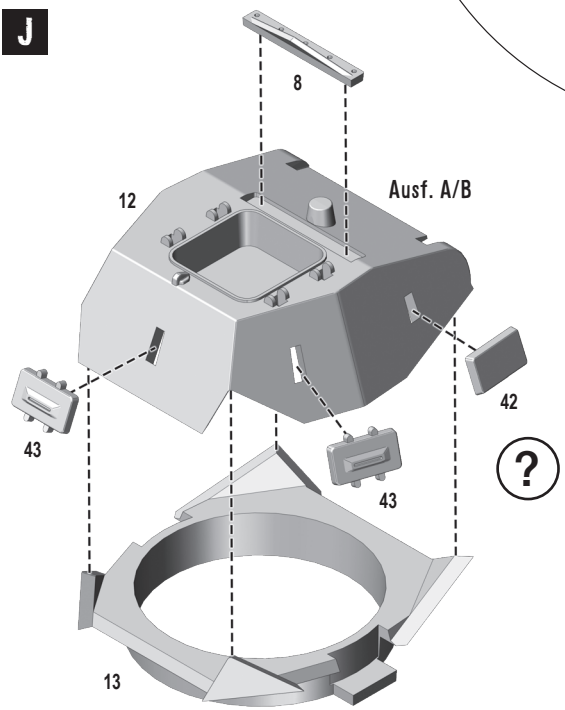

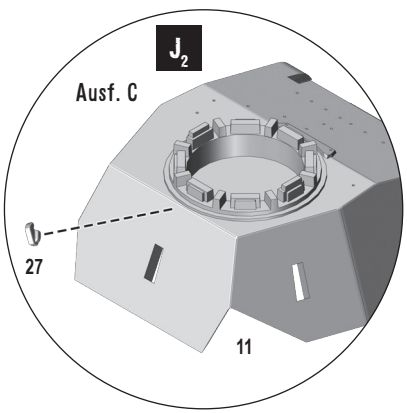

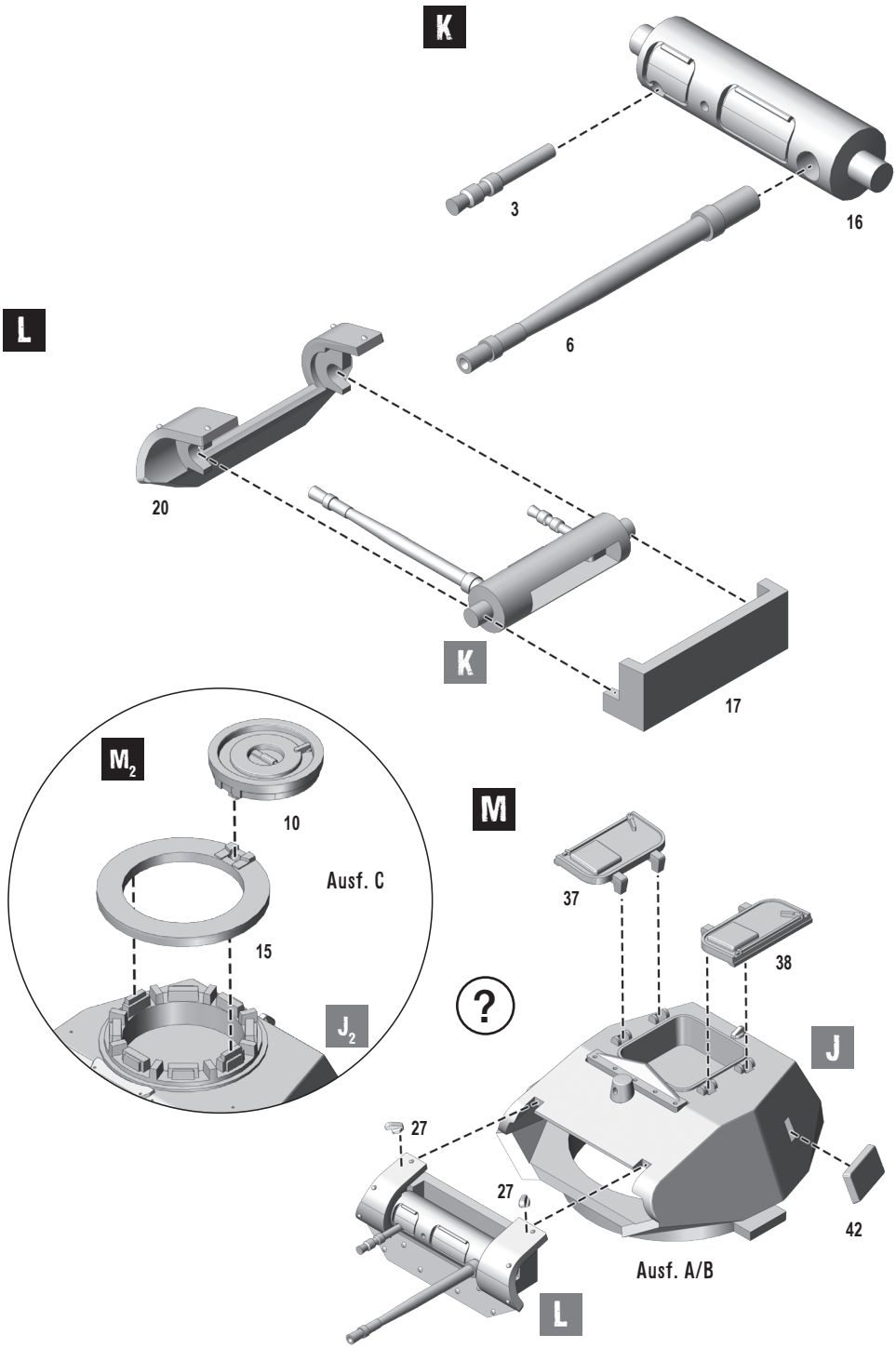
K
3
16
6
L
20
K
17
M2
10
Ausf. C
15
J2
M
37
38
?
J
27
27
42
Ausf. A/B
L

N

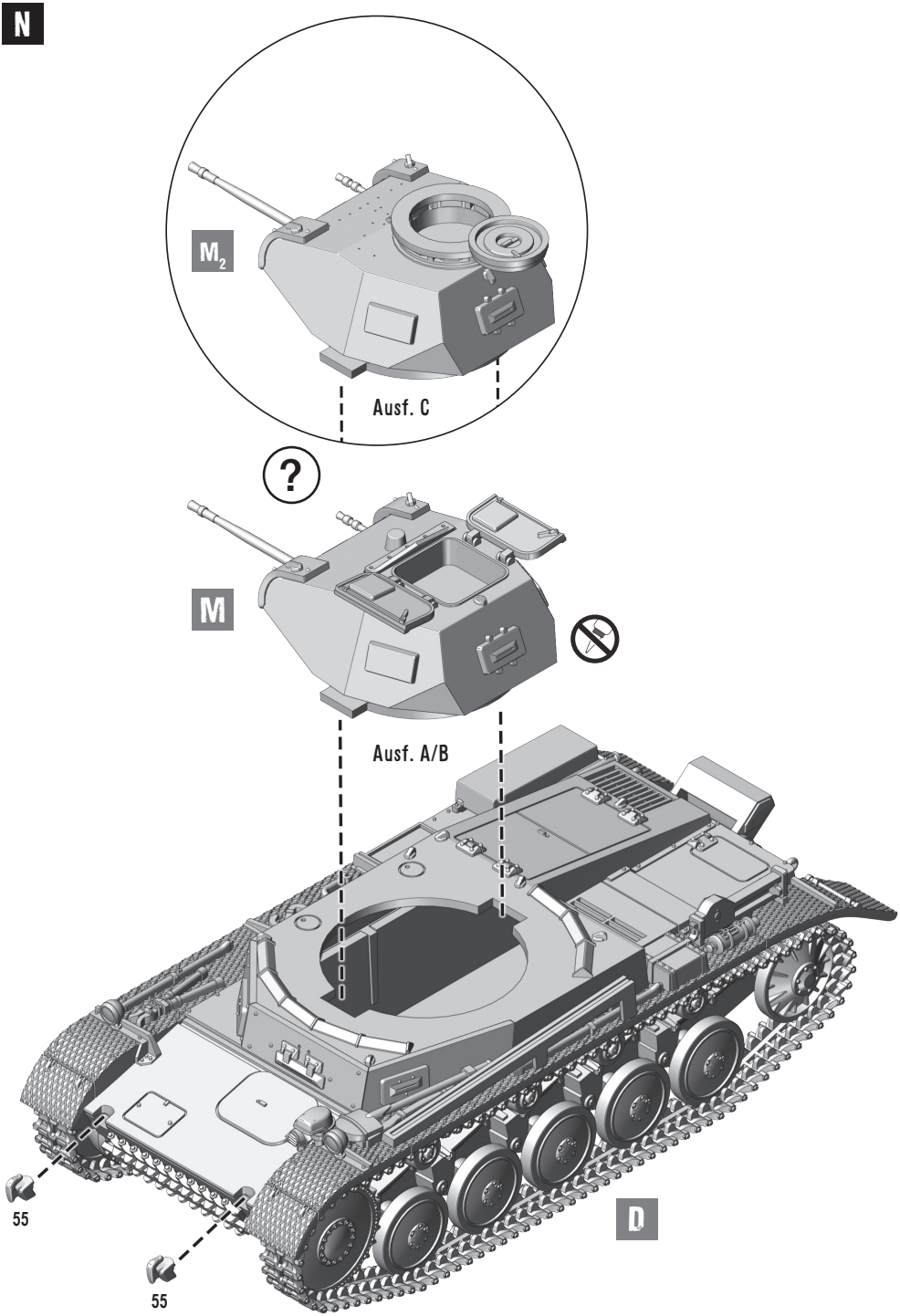

O

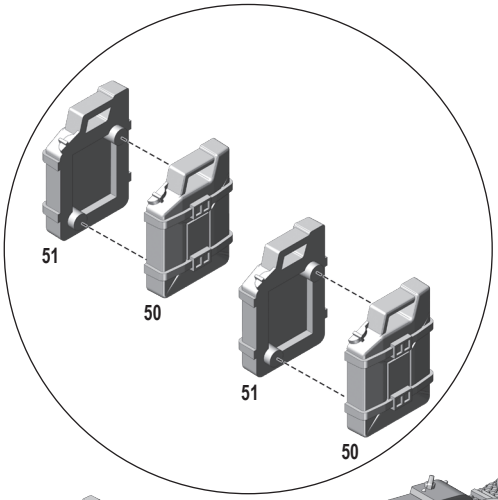

P

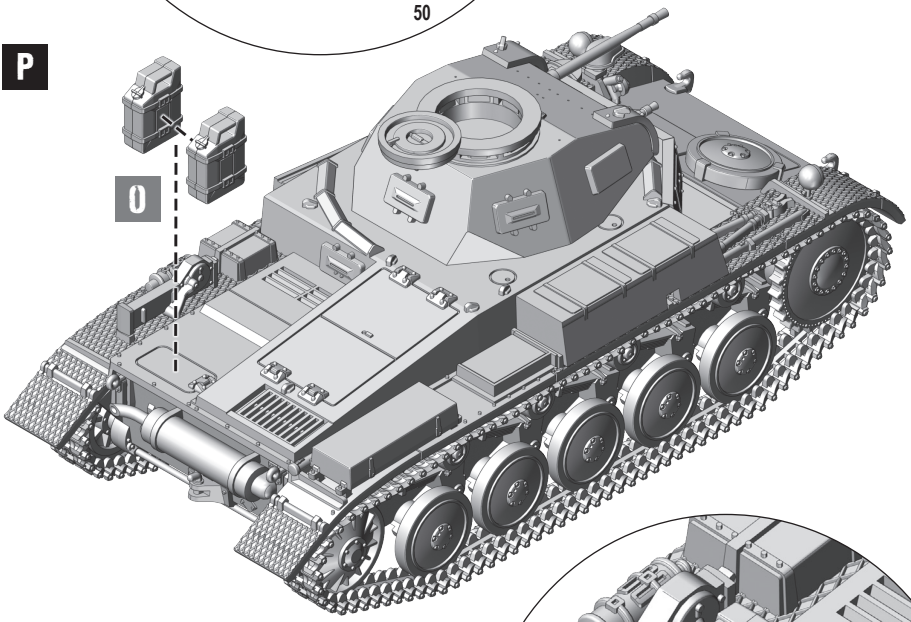

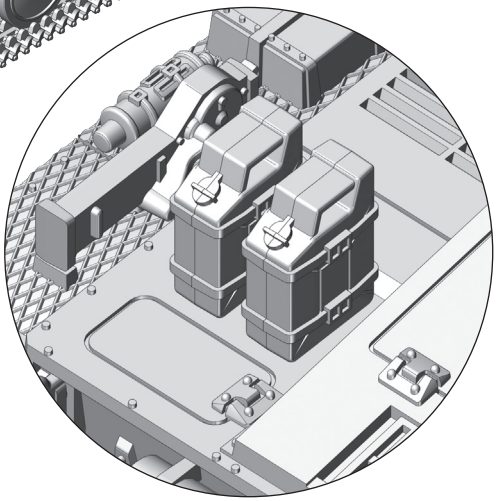

Q Use the tank commander of your choice

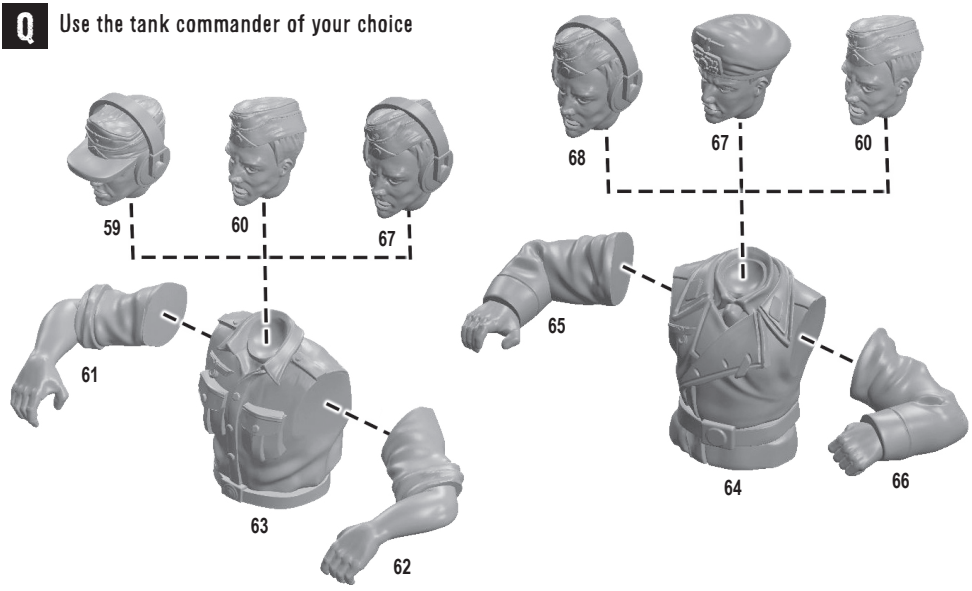



Warpaints Fanatic Deep Grey

1st Company, 15th Panzer Regiment,
5th Panzer Division,
Poland, 1939.









Warpaints Fanatic Deep Grey

AK 11003 White Grey

SS-Panzergrenadier Division 'LAH',
Russia, 1943









AK 11440 Desert Uniform Base

8th Panzer Regiment,
15th Panzer Division,
North Africa, 1941.









Component code: **4070100040**