Panzer 38(t) booklet.qxp 18/12/2017 10:40 Page 1

World War II Wargame
BOLT ACTION
www.boltaction.com

PANZER 38(T) LIGHT TANK

ASSEMBLY AND PAINTING GUIDE



Most commonly known as the Panzer 38(t), this light tank was originally a Czech design – the LT vz. 38 – which fell under the Third Reich's control when Germany occupied Czechoslovakia in 1938. The 't' in its designation relates to the German for Czech – *tschechisch*.

Well liked by its crews for its dependability and ease of repair, over 1,400 38(t)s were produced and saw active service for Germany during the invasion of Poland, the Battle for France and on the Eastern Front.

Its light weight made it ideal for use as a fast attack or reconnaissance vehicle. With its armament being considered too light against the increasingly heavier enemy vehicles, manufacture of the 38(t) ceased in 1942. It would continue to serve for the rest of the war both with German and Hungarian, Romanian and Bulgarian militaries (the waterslide decal sheet included allows for variants of each of these nations to be built).

The reliable 38(t) would continue to serve the Wehrmacht well by providing the basis for several highly successful variants such as the Hetzer and Marder tank destroyers as well as flakpanzers.

No. produced:	1,414 (for Germany)
Crew:	4
Powerplant:	Praga Typ TNHPS/II 6-cyl gasoline
Top speed:	26 mph (42 km/h)
Range:	160 miles (250 km)
Armament:	3.7 cm KwK 38(t) L/47.8 7.92 mm ZB-53 (MG 37(t)) machine gun
Armour:	8–30 mm Ausf. A–D 8–50 mm Ausf. E–G
Weight:	9.725–9.85 tonnes

WARLORD GAMES™
warlordgames.com

ASSEMBLY GUIDE KEY

A Assembly stage	Do Not Glue.	22 Part number
A Previous assembly stage	! Special assembly instructions	3 Decal number
? Optional assembly	Drill part	987 Paint number (Vallejo)

Follow this simple guide to building your Panzer 38(t) light tank.

Carefully remove each component from the frame with clippers or a craft knife. Trim off excess plastic before assembling. Test fit all parts before applying glue.

We recommend using polystyrene cement to assemble the kit, and to use this in a well-ventilated area.

Keep tools, glues, paints and small components away from children. Warlord Games recommend this kit for ages 14 and over.

DECAL APPLICATION GUIDE

- Apply a coat of gloss varnish to the areas that will receive the decal and allow this to dry fully.
- Cut out a decal from the sheet and soak it in luke warm water for 2-3 minutes.
- Once the design has started to separate from the backing paper, use tweezers or a wet paintbrush to slide the design into place on the model.
- Use a tisue to dab away any excess water from the model, and allow to dry.
- Apply a coat of matt varnish to seal the decal in place.

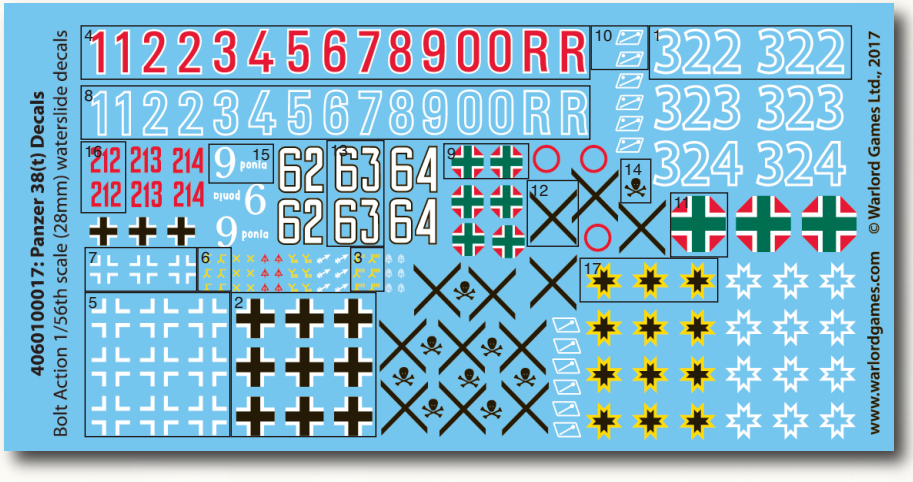

Panzer 38(t) booklet.qxp 18/12/2017 10:40 Page 3

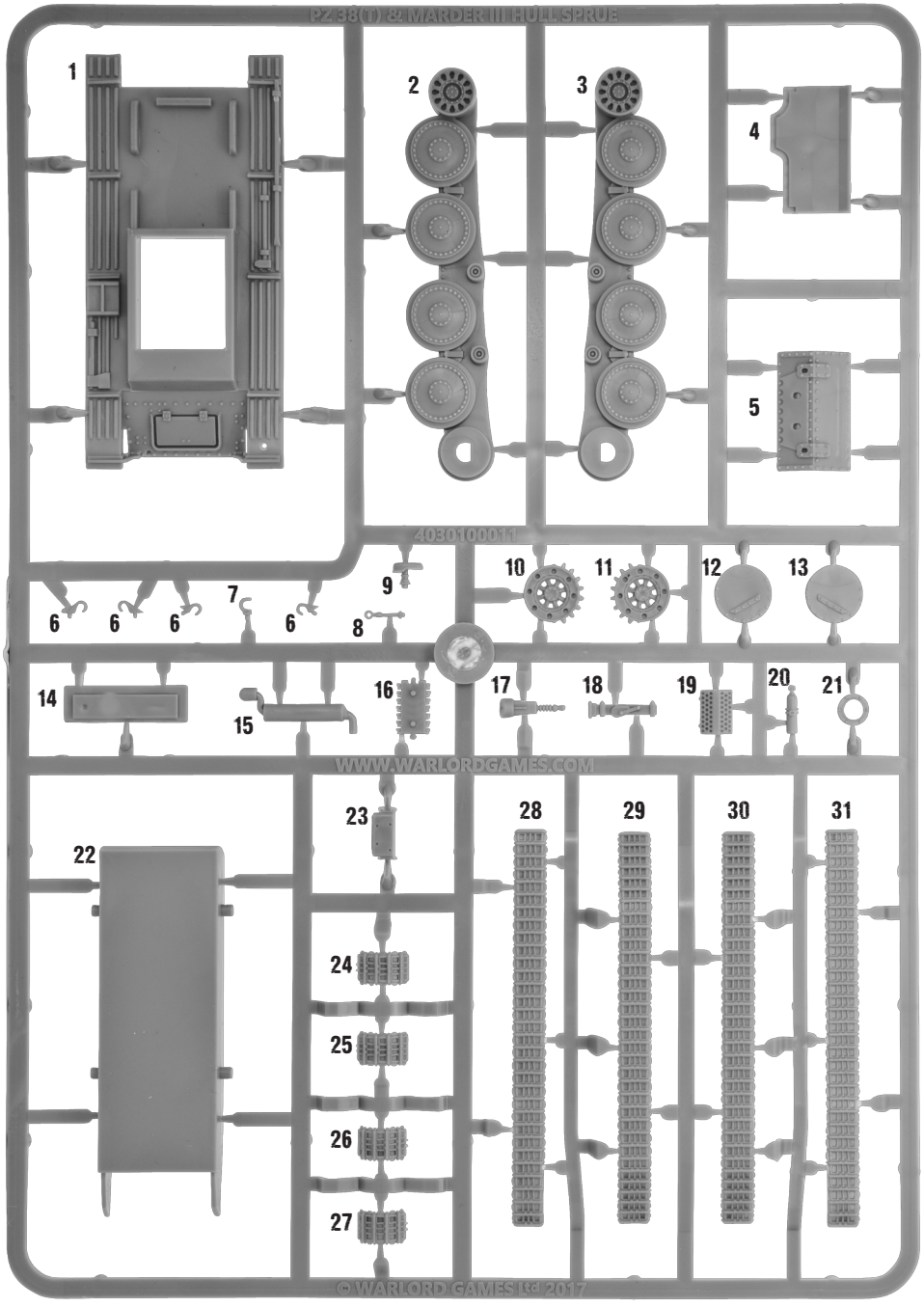

Panzer 38(t) booklet.qxp 18/12/2017 10:40 Page 4

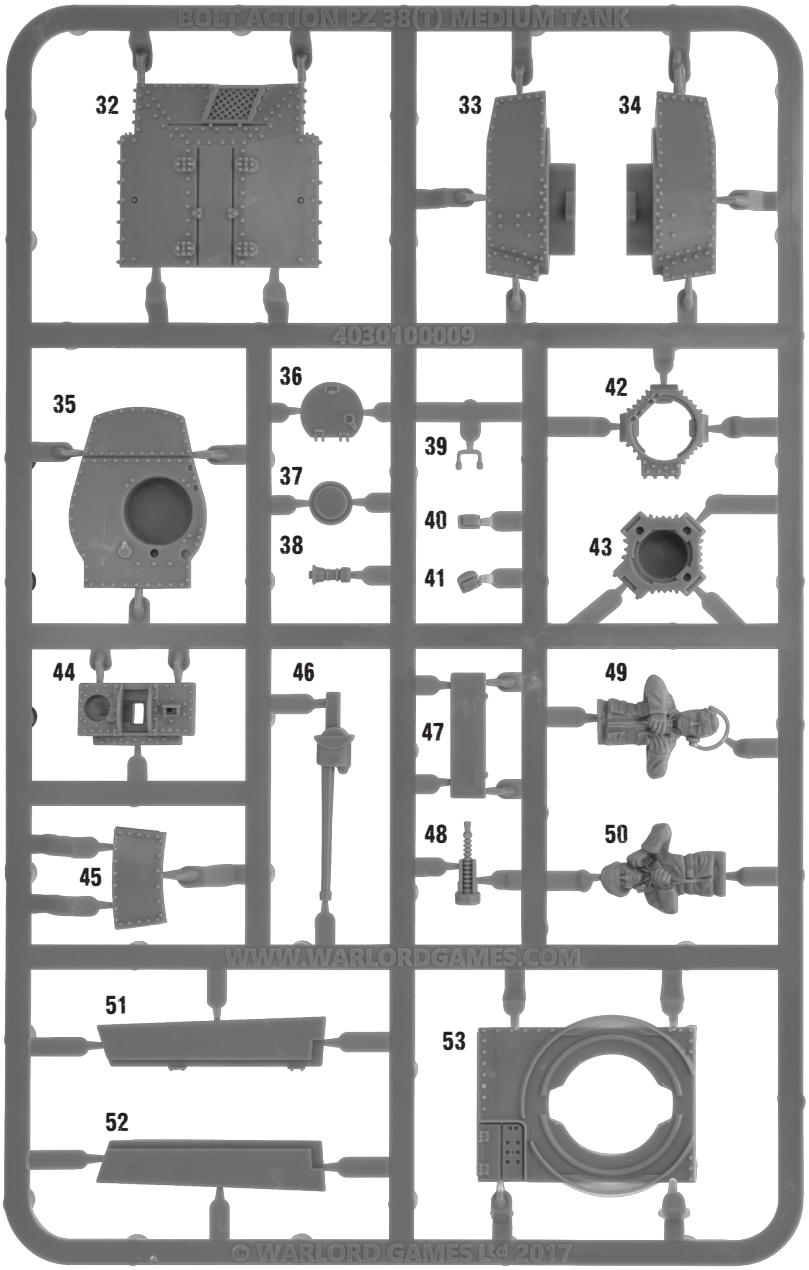

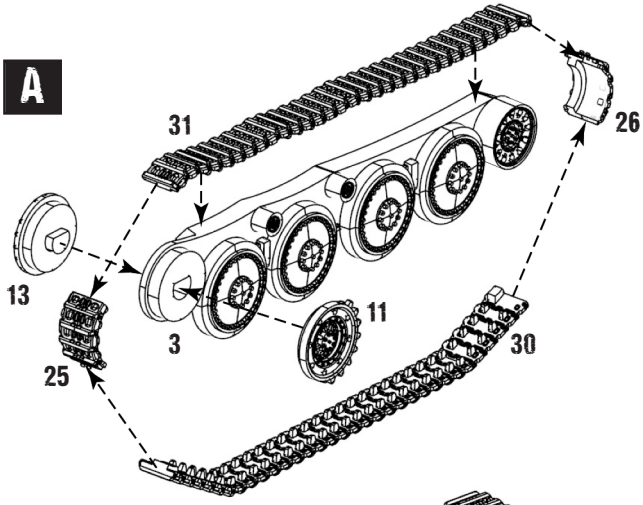
A
31
26
13
11
3
30
25

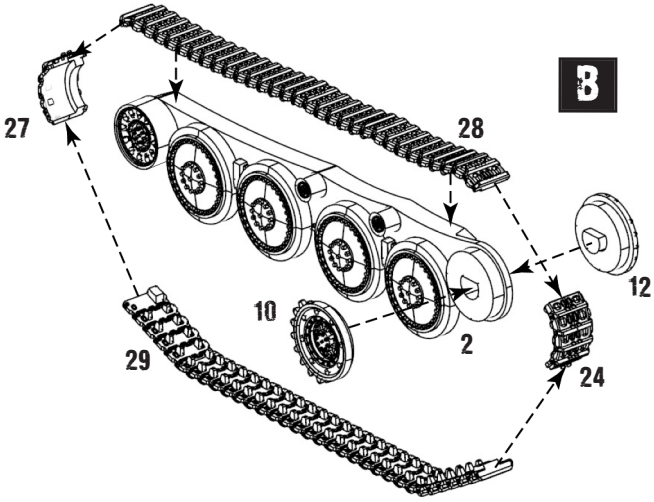
B
27
28
12
10
2
29
24

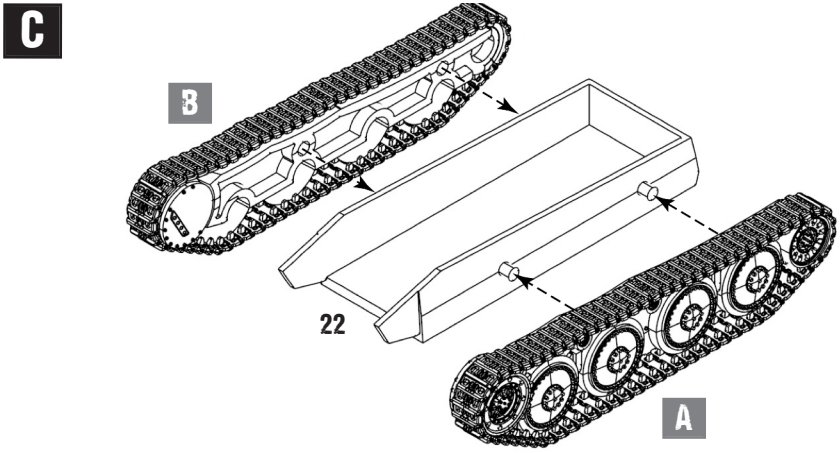
C
B
22
A

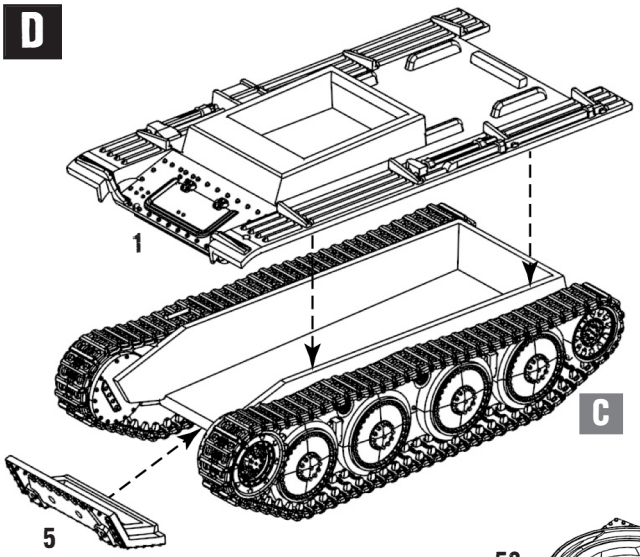
D
1
C
5

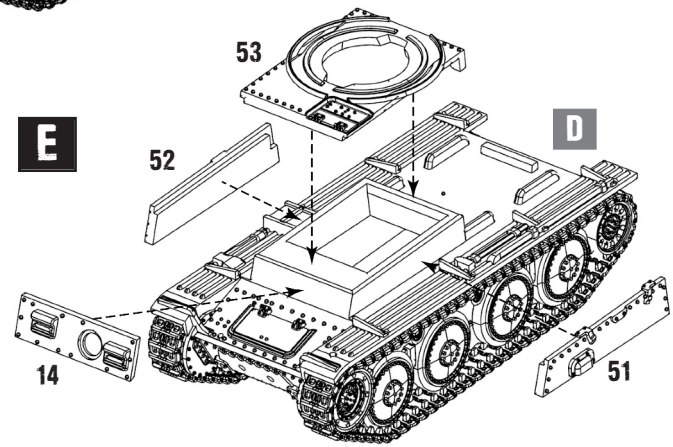
53
E
D
52
14
51

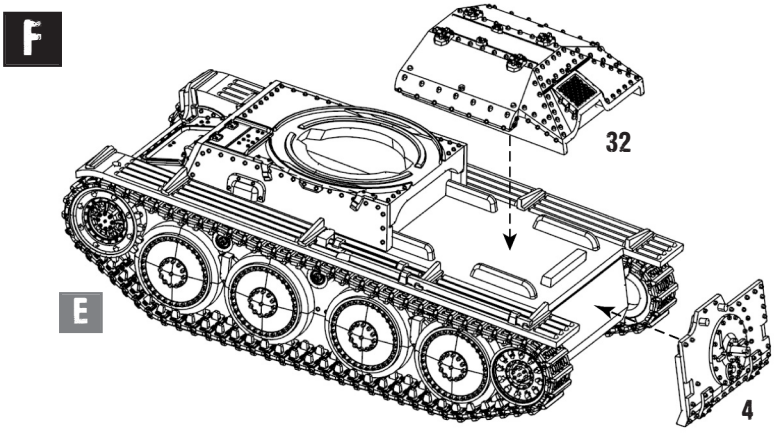
F
32
E
4

G

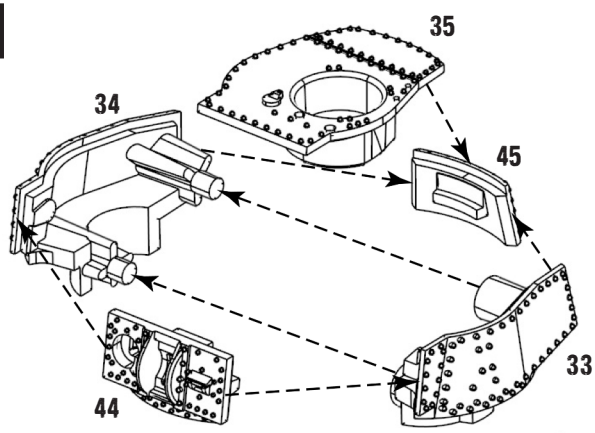

H

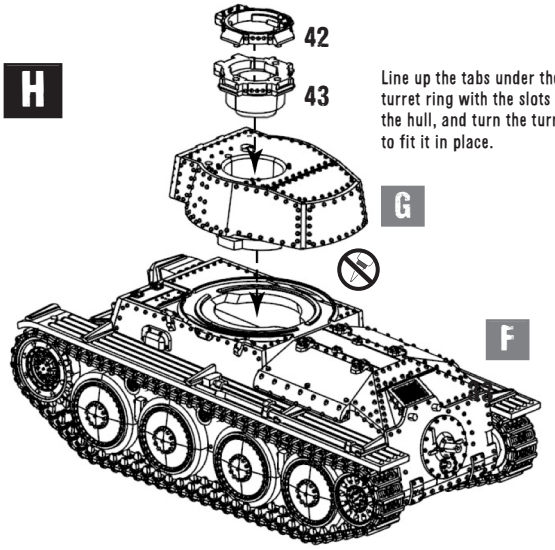

Line up the tabs under the turret ring with the slots in the hull, and turn the turret to fit it in place.

I

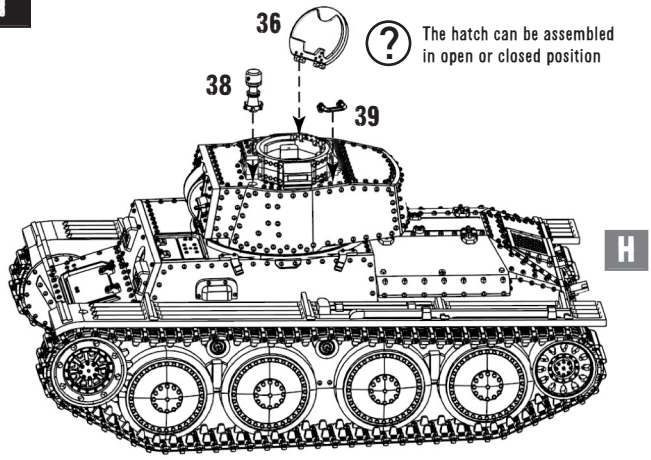

The hatch can be assembled in open or closed position

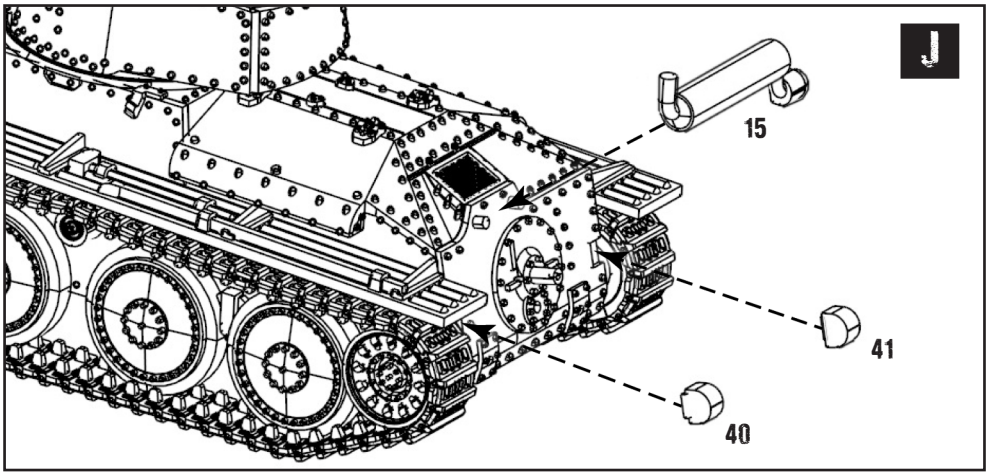
J
15
41
40

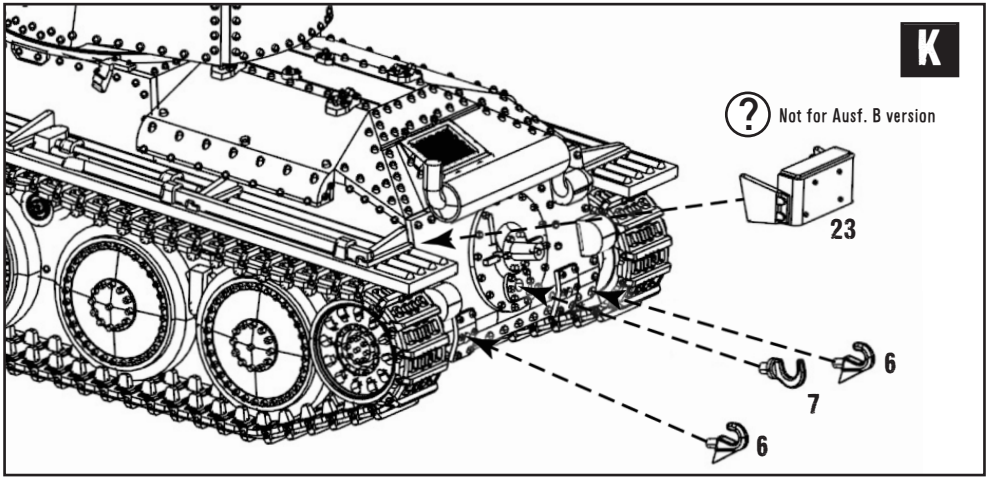
K
Not for Ausf. B version
23
6
7
6

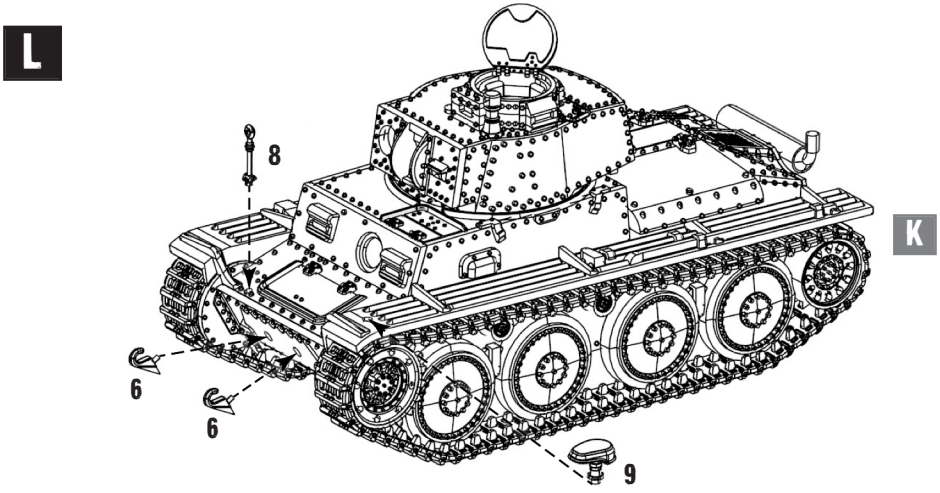
L
8
K
6
6
9

M

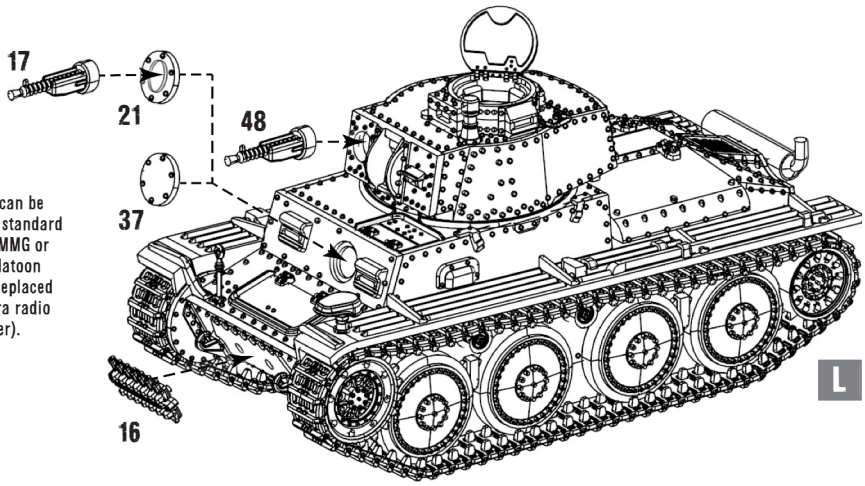

Panzer 38(t) can be assembled with standard front-facing MMG or without it (platoon commanders replaced it with an extra radio transceiver).

N

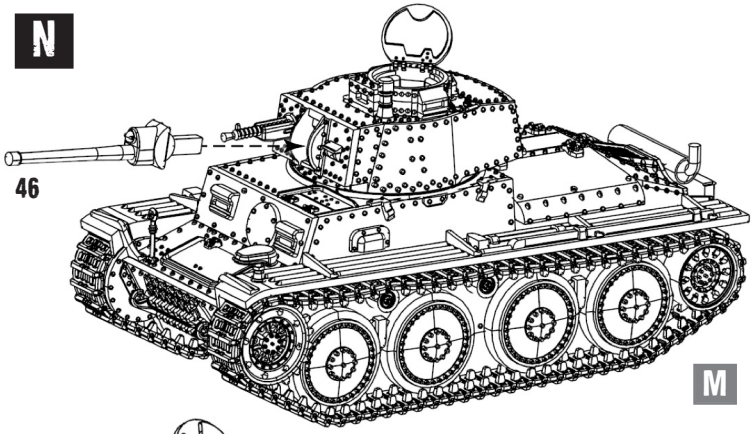

O

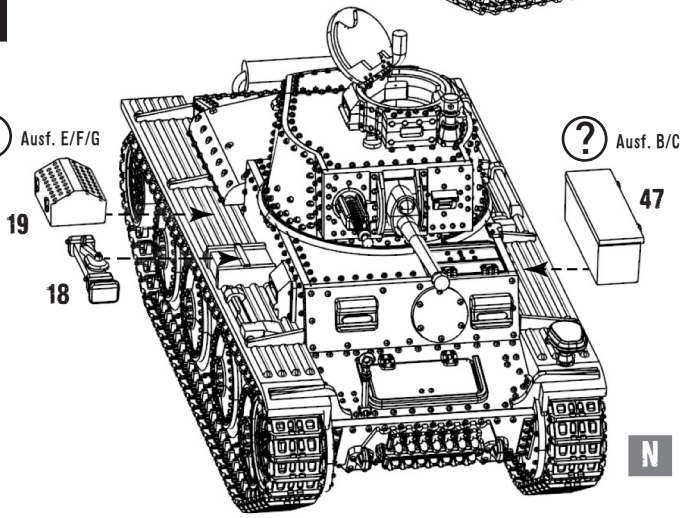

P

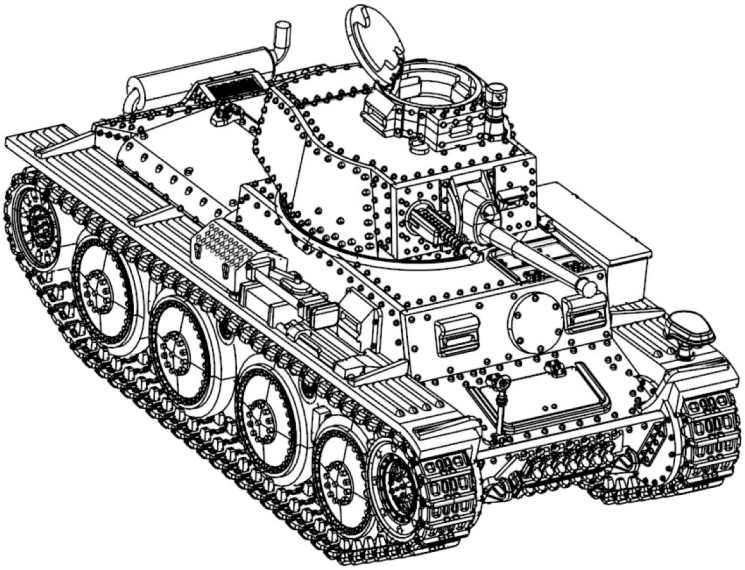

O

Q



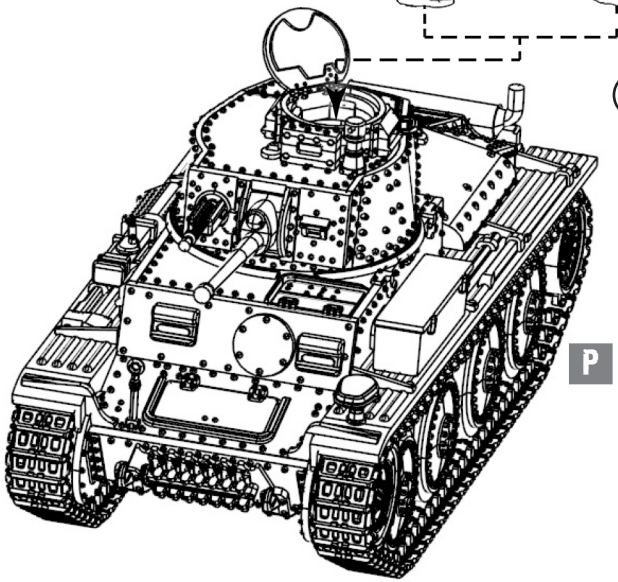

P

Assemble the vehicle with an appropriate tank commander: early war (part 50) or mid to late war (part 49).

7th Panzer Division, France 1940



- 603 Dunkelgrau Surface Primer
- 890 Refractive Green
- 951 White

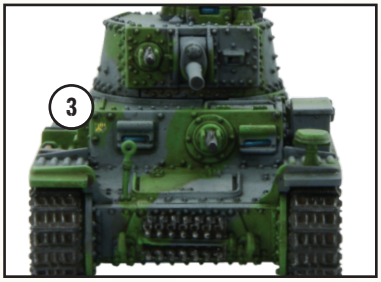

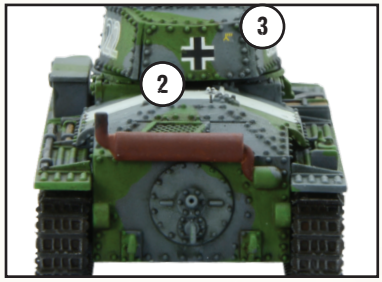

Army Group Centre, 6th Panzer Division, Moscow 1941–1942



- 603 Dunkelgrau Surface Primer
- 820 Off White

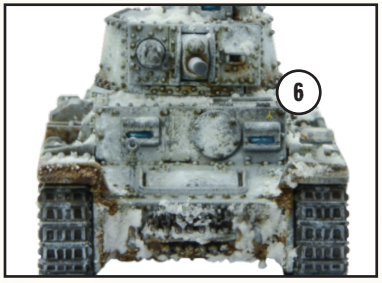

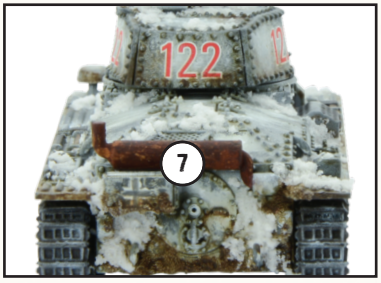

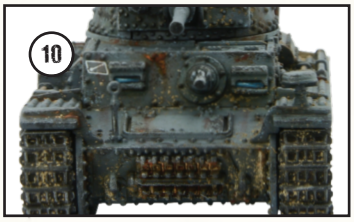

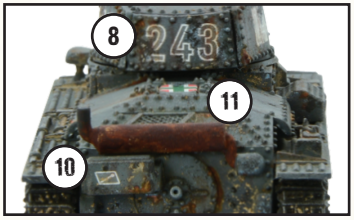

Hungarian 30th Tank Regiment, 1st Company, 1942



603 Dunkelgrau Surface Primer

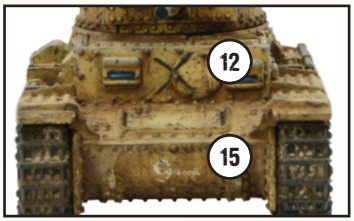

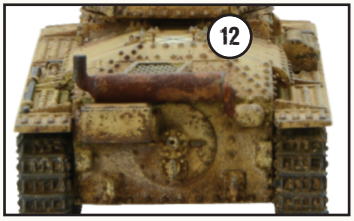

Bulgarian 9th Company Armoured Brigade, 1944



Army Painter Desert Yellow



Romanian 54th Armoured Company, 1944

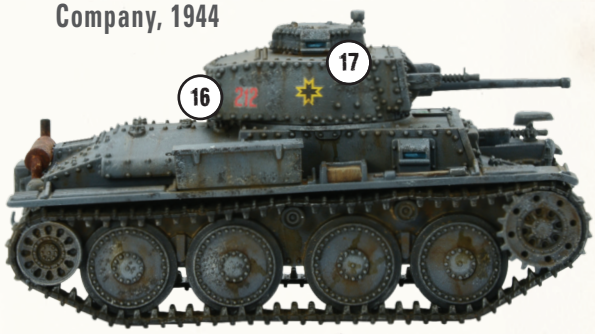

603 Dunkelgrau Surface Primer

Component code: **4070100020**