4070100017_King Tiger leaflet.qxp 14/12/2021 11:56 Page 1

World War II Wargame
BOLT ACTION
www.boltaction.com

KING TIGER (TIGER II)

ASSEMBLY AND PAINTING GUIDE



The Königstiger (officially named the Panzerkampfwagen Tiger Ausf. B or Sd.kfz 182), more commonly known as the 'King Tiger' or 'Royal Tiger' by Allied troops, was a development of the fearsome Tiger I tank. Its introduction to hostilities in 1944 caused significant problems for the Allies but ultimately it saw action too late to have a game-changing impact on the war.

Deployed on both the Western and Eastern fronts the King Tiger's long 8.8cm gun had enormous operational accuracy with the ability to knock out any Allied tank frontally at ranges exceeding 2.5 kilometres (1.6 miles), way beyond the effective range of any Allied tank gun.

Two turret designs were produced with Porsche and Henschel competing for the contract. As the first Henschel chassis rolled off the production line, only the turret originally destined for the rejected Porsche project were available. Fifty Porsche turrets were mounted to Henschel's hull and used in action until the Henschel turret variant became available.

The first combat use of the King Tiger was during the battles in Normandy by 503rd Heavy Panzer Battalion (s.H.Pz.Abt.503), opposing Operation Atlantic between Troarn and Demouville on 18 July 1944. On the Eastern front its combat debut came on the 12th August 1944 by the 501st Heavy Panzer Battalion (s.H.Pz.Abt.501) resisting the Lvov–Sandomierz Offensive, where it attacked the Soviet bridgehead over the Vistula River near Baranów Sandomierski.

No. produced:	**492**
Crew:	**5**
Powerplant:	**V-12 Maybach HL 230 P30 gasoline**
Top speed:	**25.8 mph (41.5 km/h)**
Range:	**110 miles (170 km)**
Armament:	**8.8 cm KwK 43 L/71**
Armour:	**25-185 mm**
Weight:	**68.5 tonnes (Porsche turret) 69.8 tonnes (Henschel turret)**

WARLORD GAMES
warlordgames.com

ASSEMBLY GUIDE KEY

A Assembly stage	Do Not Glue.	22 Part number
A Previous assembly stage	! Special assembly instructions	3 Decal number
? Optional assembly	Drill part	987 Paint number (Vallejo)

Follow this simple guide to building your King Tiger heavy tank.

Carefully remove each component from the frame with clippers or a craft knife. Trim off excess plastic before assembling. Test fit all parts before applying glue.

We recommend using polystyrene cement to assemble the kit, and to use this in a well-ventilated area.

Keep tools, glues, paints and small components away from children. Warlord Games recommend this kit for ages 14 and over.

DECAL APPLICATION GUIDE

- Apply a coat of gloss varnish to the areas that will receive the decal and allow this to dry fully.
- Cut out a decal from the sheet and soak it in luke warm water for 2-3 minutes.
- Once the design has started to separate from the backing paper, use tweezers or a wet paintbrush to slide the design into place on the model.
- Use a tisue to dab away any excess water from the model, and allow to dry.
- Apply a coat of matt varnish to seal the decal in place.

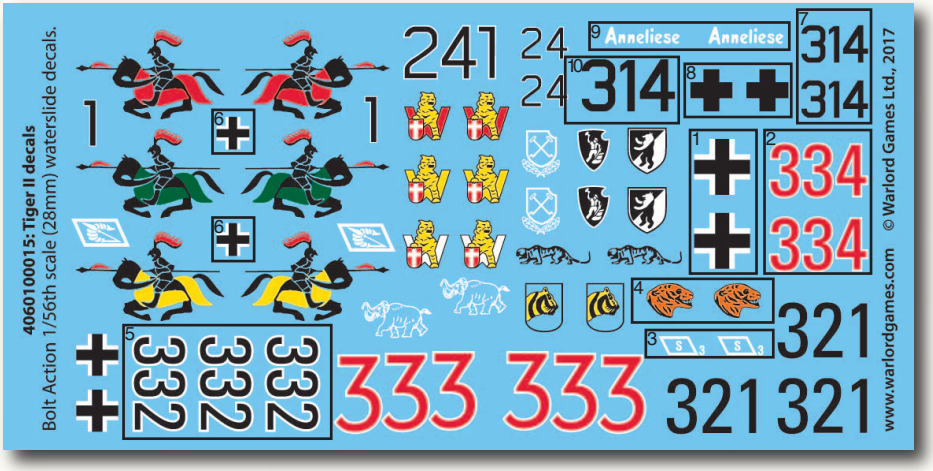

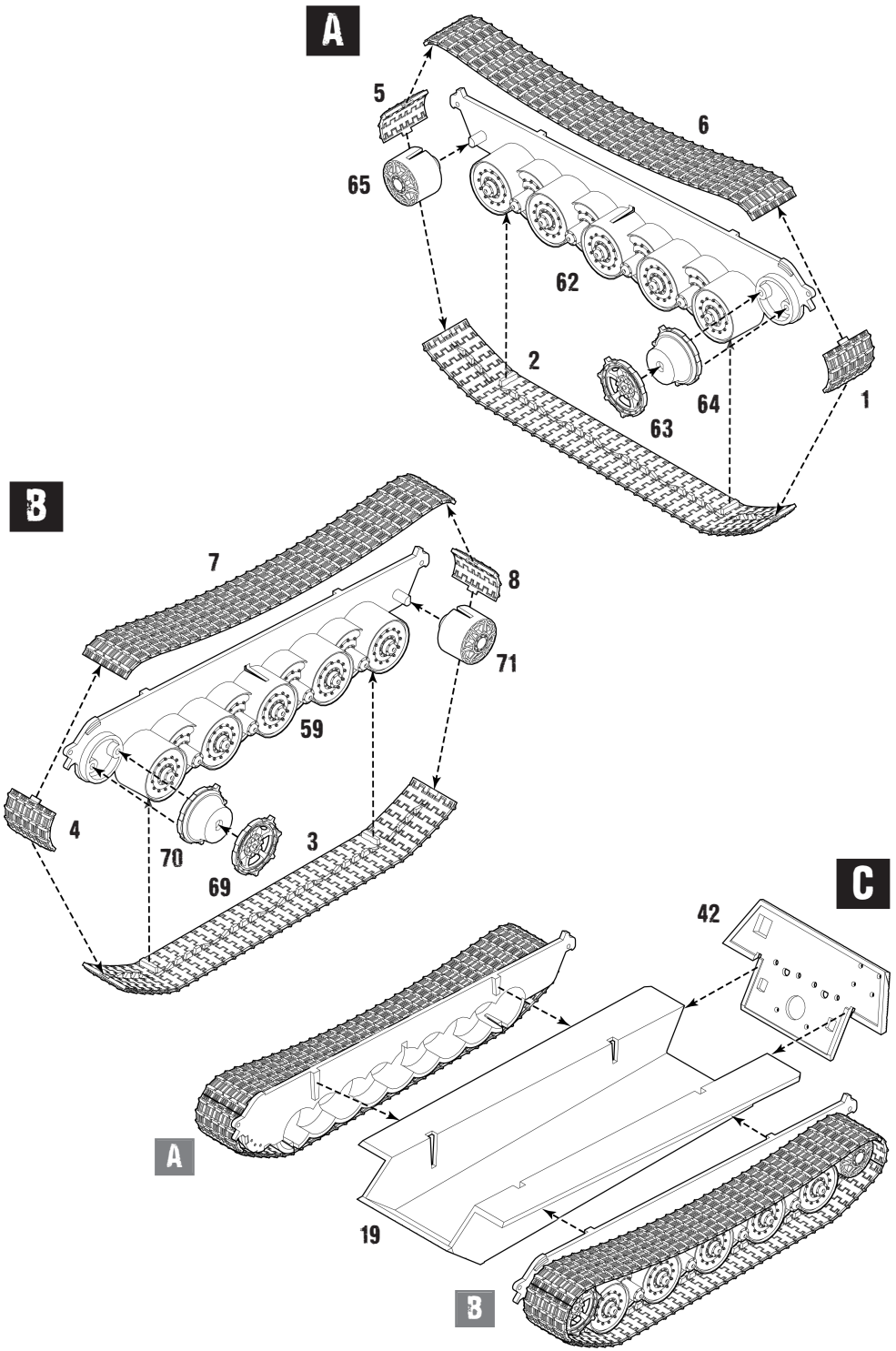
A
5
6
65
62
2
64
1
63
B
7
8
71
59
4
70
3
69
C
42
A
19
B

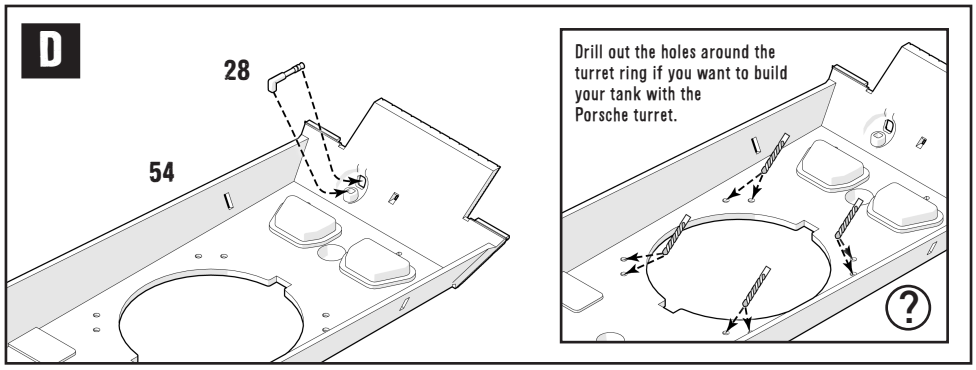
D
28
54
Drill out the holes around the turret ring if you want to build your tank with the Porsche turret.

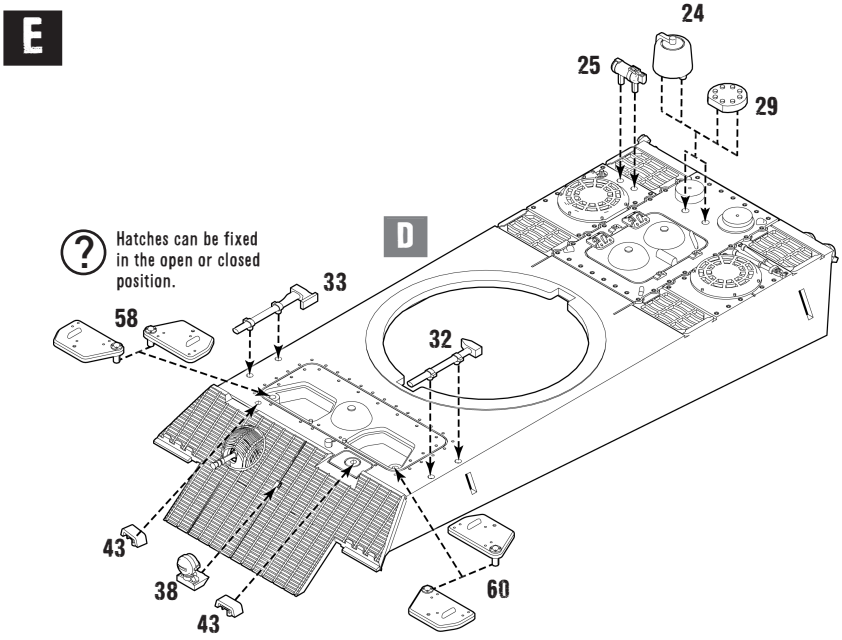
E
24
25
29
D
Hatches can be fixed in the open or closed position.
33
58
32
43
38
43
60

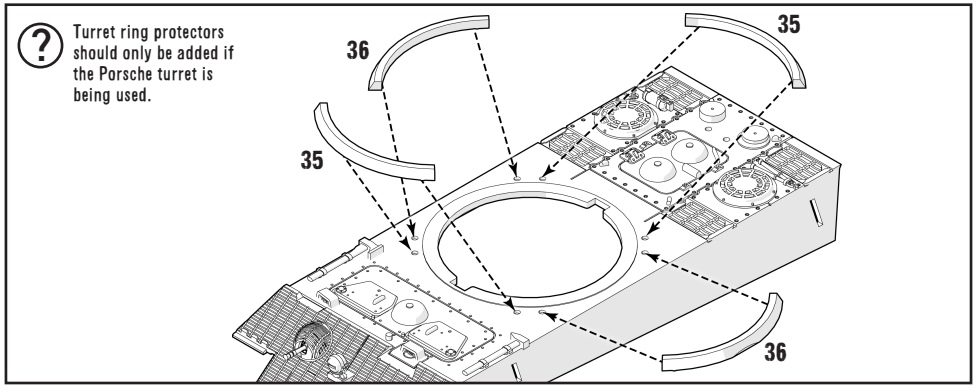
Turret ring protectors should only be added if the Porsche turret is being used.
36
35
35
36

F

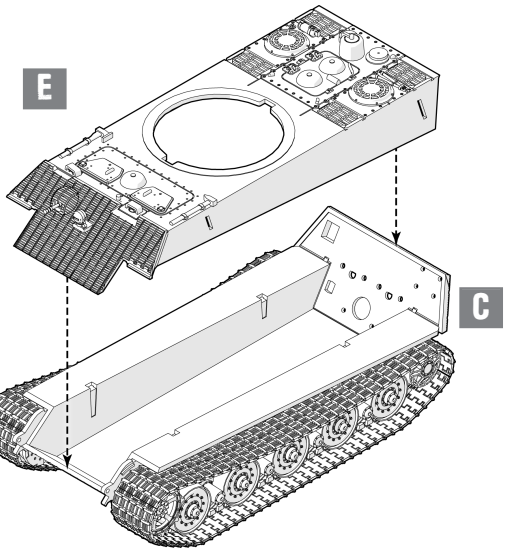
E
C

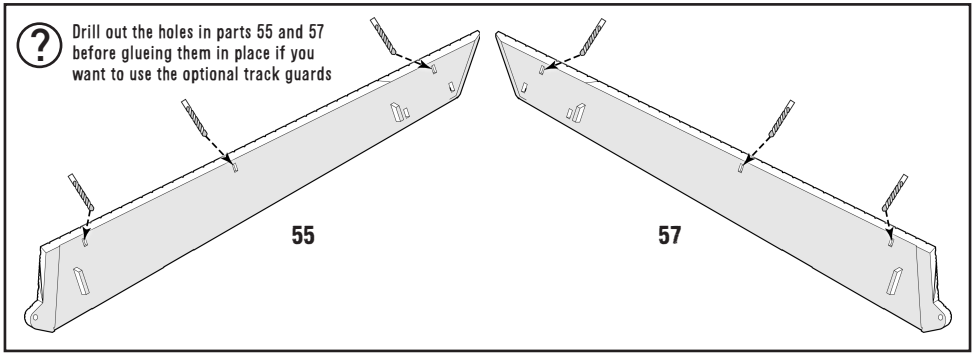
Drill out the holes in parts 55 and 57 before glueing them in place if you want to use the optional track guards
55
57

G

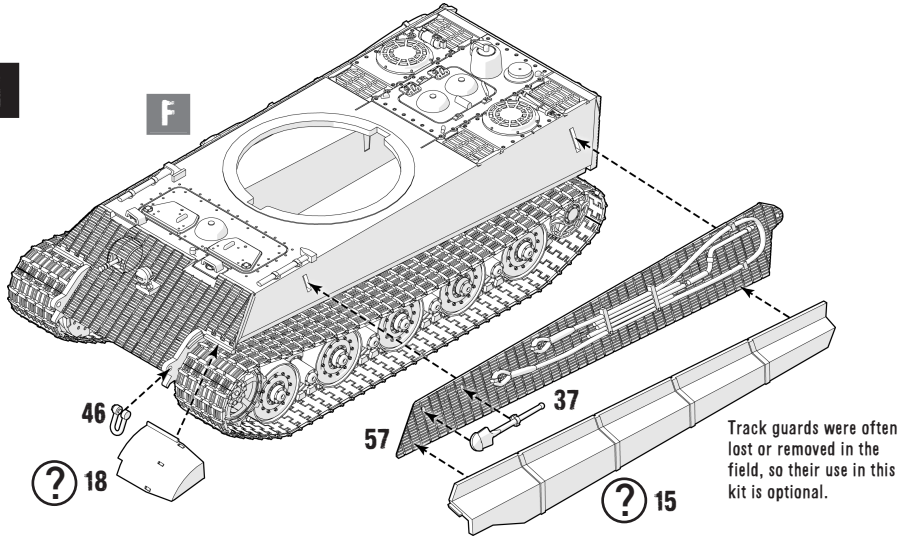
F
46
18
57
37
15
Track guards were often lost or removed in the field, so their use in this kit is optional.

H

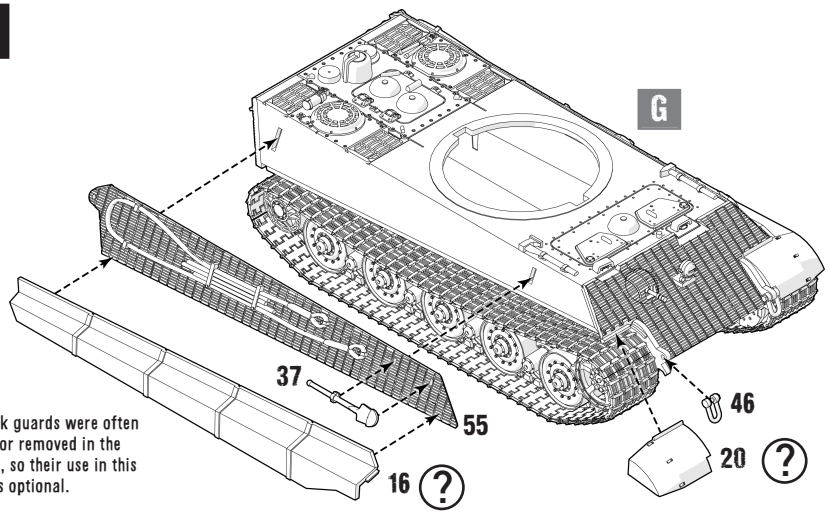

Track guards were often lost or removed in the field, so their use in this kit is optional.

I

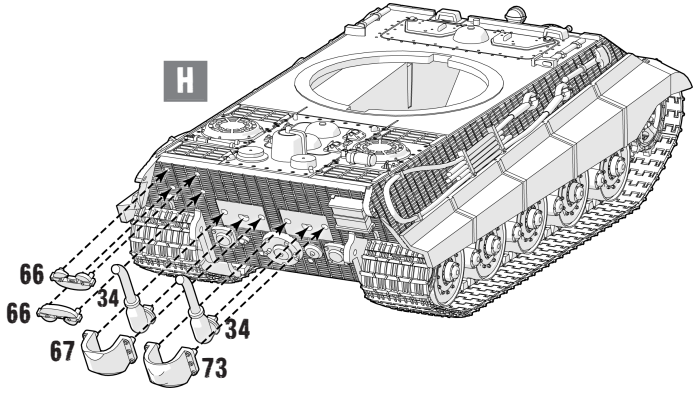

J

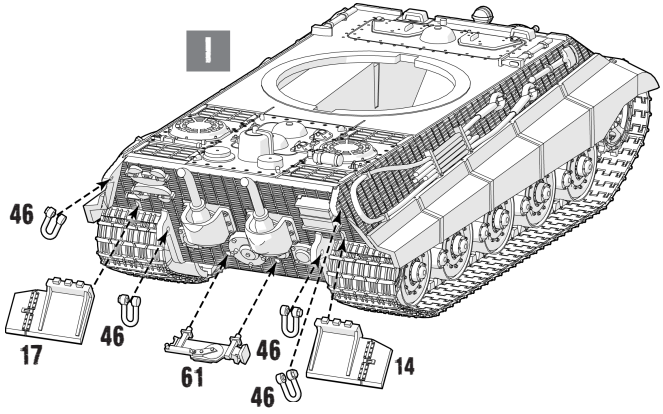

KING TIGER WITH PORSCHE TURRET

Follow stages K to O to complete your model.



K

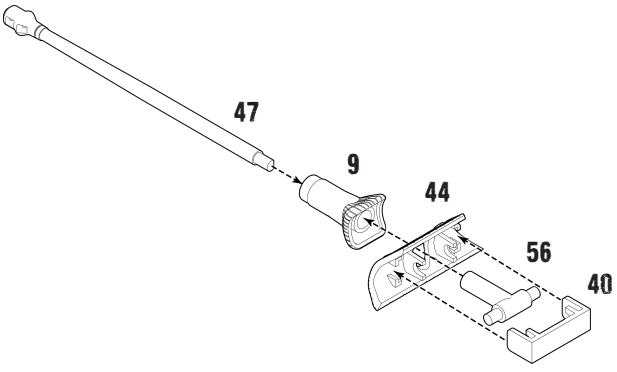

L

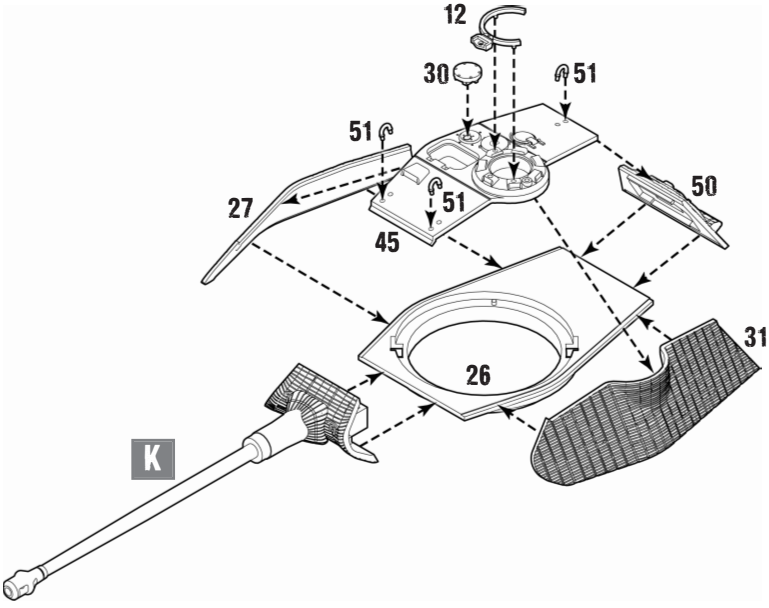

M

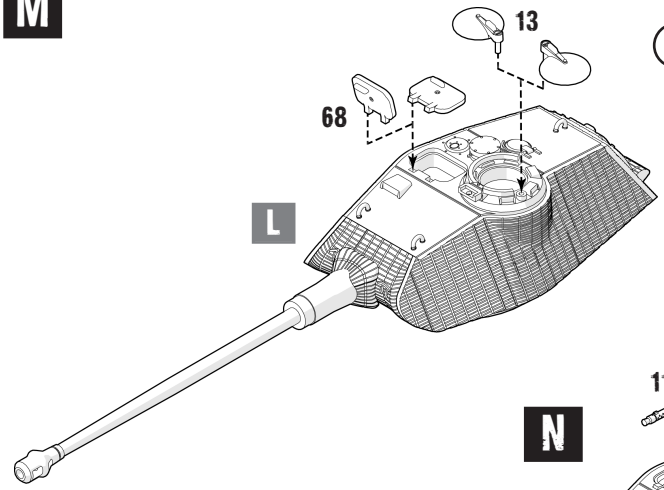

Hatches can be fixed in the open or closed position.

Tank commander can be placed in an open hatch. Alternative commanders and crew are available from the Warlord games web store:

www.warlordgames.com

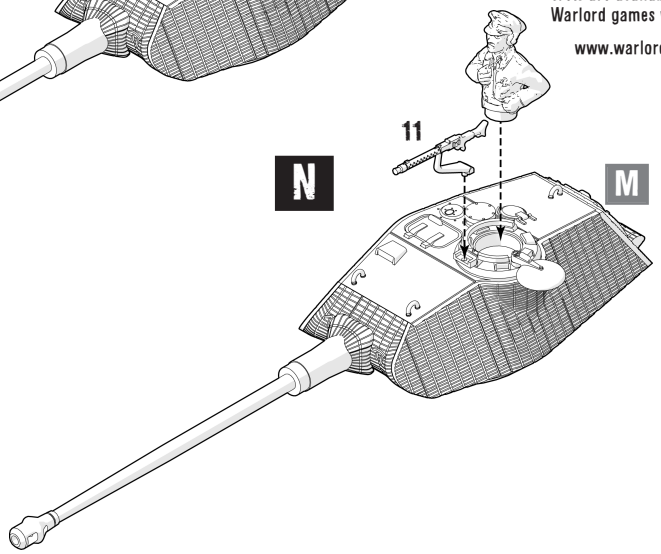

O

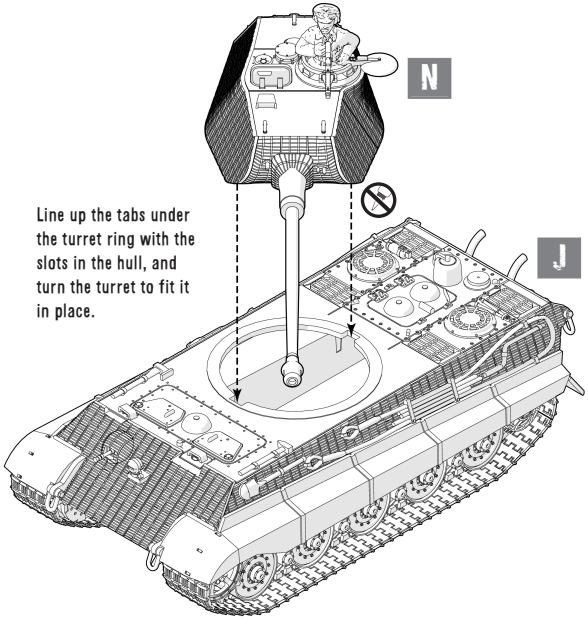

Line up the tabs under the turret ring with the slots in the hull, and turn the turret to fit it in place.

KING TIGER WITH HENSCHEL TURRET

Follow stages P to T to complete your model.



P

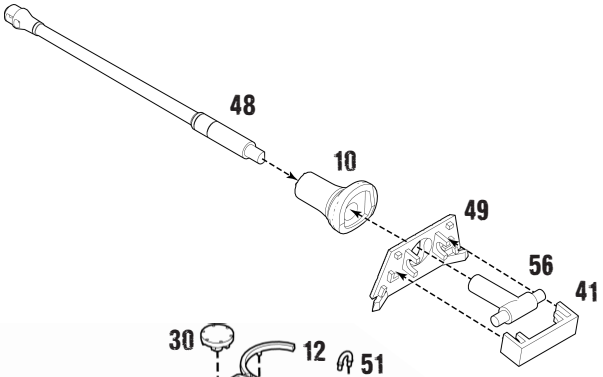

Q

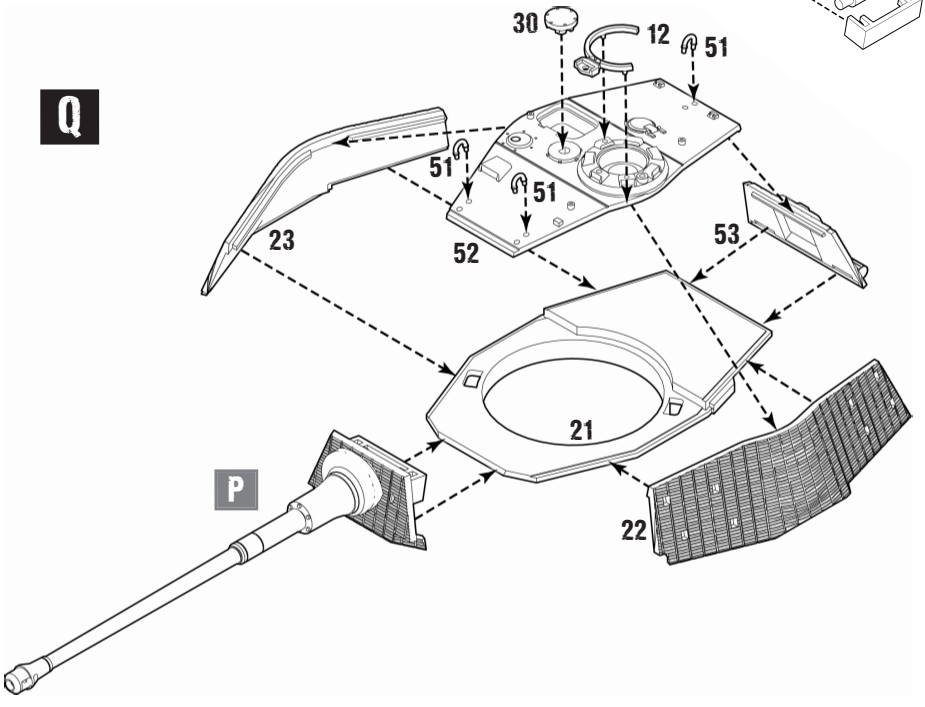

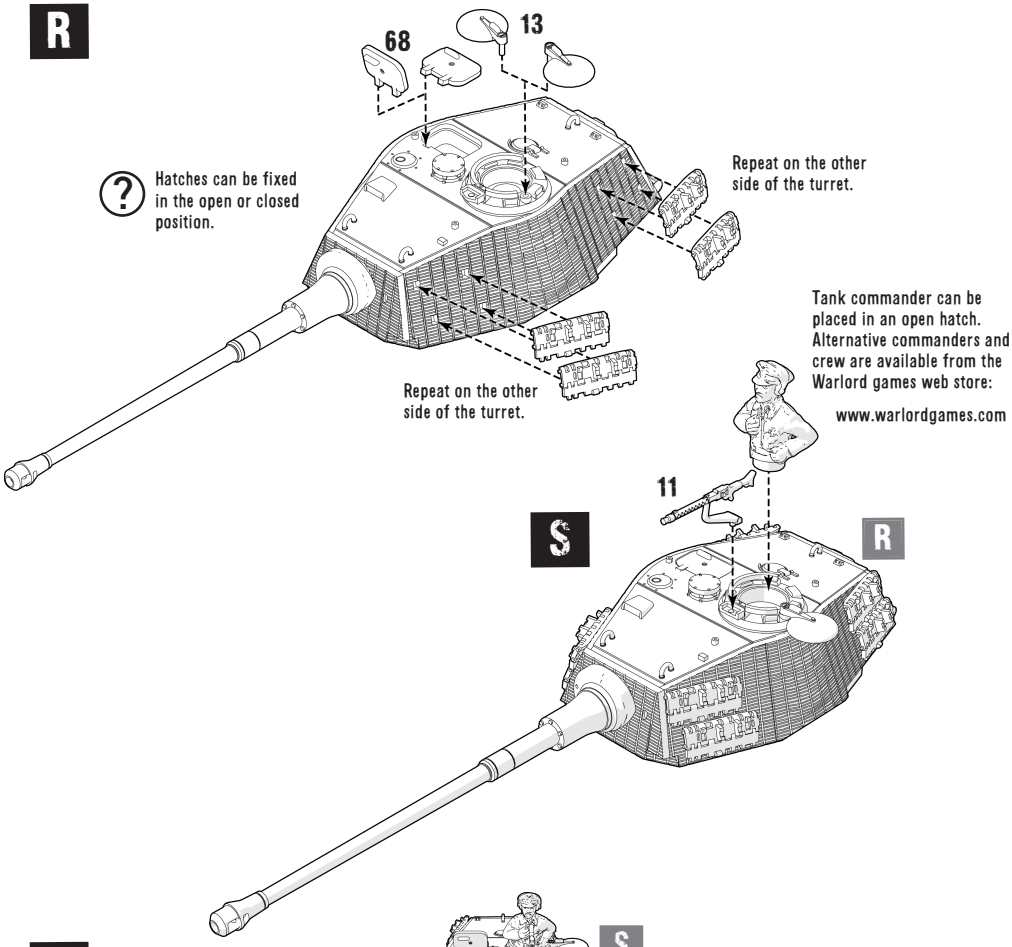
R
68
13
Hatches can be fixed in the open or closed position.
Repeat on the other side of the turret.
Repeat on the other side of the turret.
Tank commander can be placed in an open hatch. Alternative commanders and crew are available from the Warlord games web store:
www.warlordgames.com
11
S
R

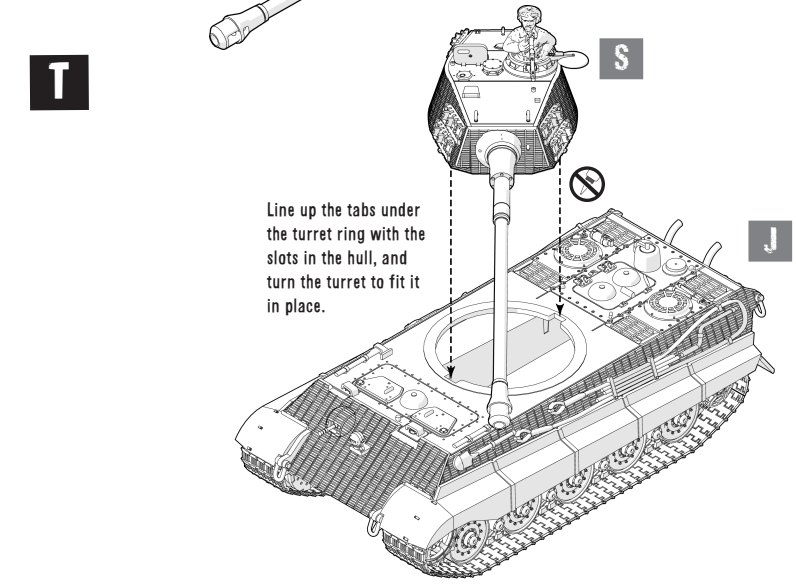
T
S
Line up the tabs under the turret ring with the slots in the hull, and turn the turret to fit it in place.
J

KING TIGER WITH HENSCHEL TURRET

Tank Ace Kurt Knispel's 'ambush' camouflage, 1944-1945

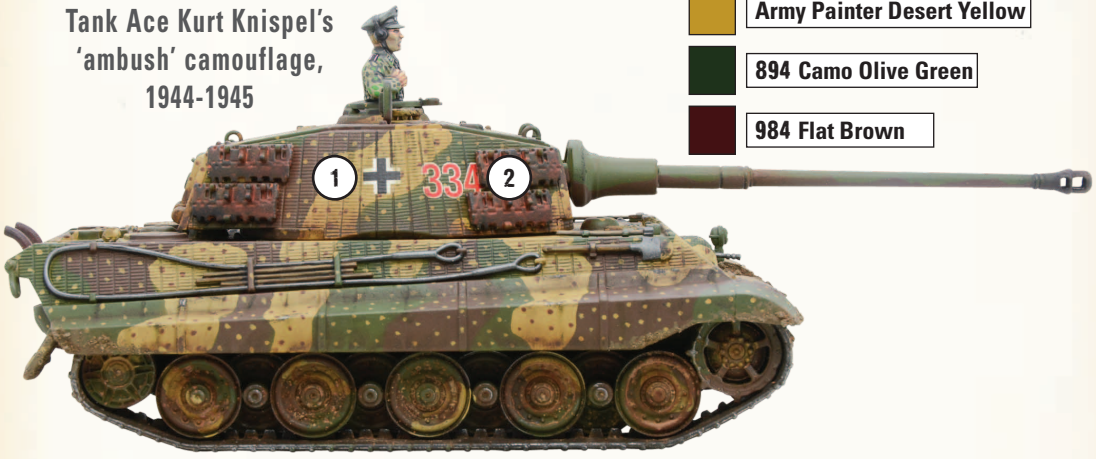

- Army Painter Desert Yellow
- 894 Camo Olive Green
- 984 Flat Brown

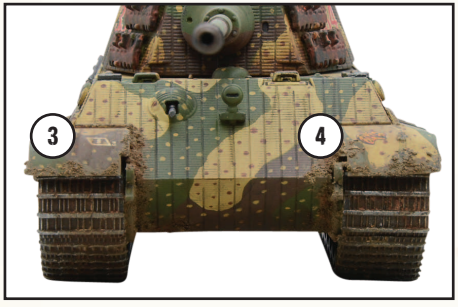

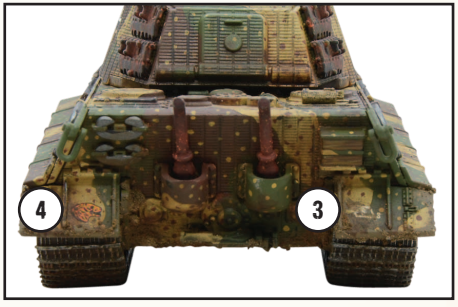

511 Panzer Battalion, March 1945

MIX PAINTS:

- 60% Army Painter Desert Yellow
- 40% Army Painter Skeleton Bone

- 348 Splinter Strips



4070100017_King Tiger leaflet.qxp 14/12/2021 11:56 Page 12

KING TIGER WITH PORSCHE TURRET



3rd Company of the
503 Panzer Battalion, 1945

- Army Painter Desert Yellow
- 894 Camo Olive Green
- 984 Flat Brown

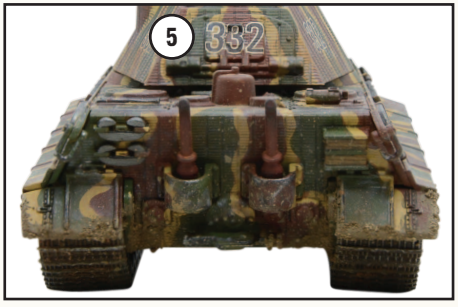

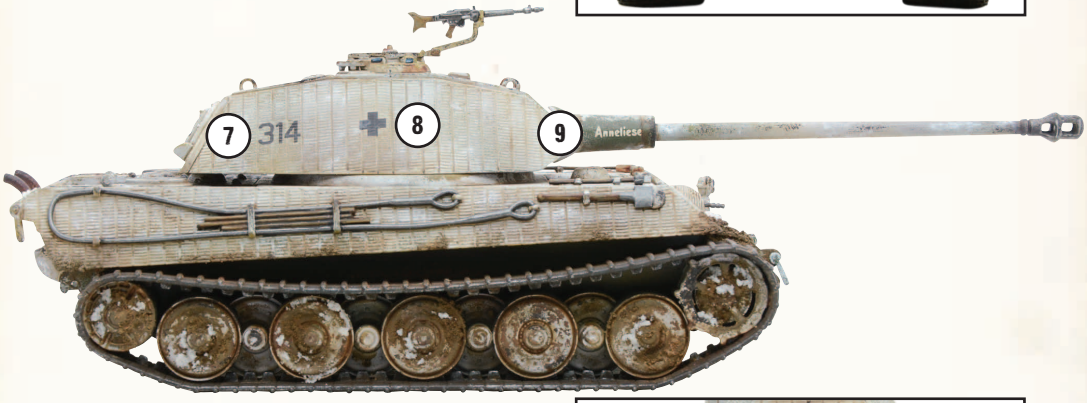

503 Panzer Battalion in winter
camouflage, Hungary, 1945

- Army Painter Desert Yellow
- 820 Off White

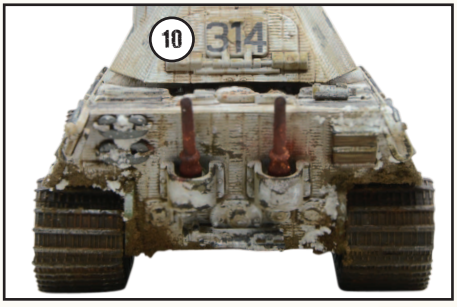

Component code: **4070100017**