World War II Wargame
BOLT ACTION
www.boltaction.com

PANZER III

This tank can be built as one of the following variants: Ausf. J (early and late), L, M, L/N or M/N. Most Ausf. N vehicles in service were converted from either the L or the M, and this kit enables you to build either version.

Once you have decided on the version you want to build, follow all the instructions marked with the model type. Instructions without a model type are common to all variants. We recommend you do a 'dry run' of each stage before applying glue.

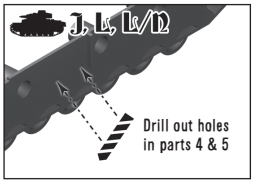

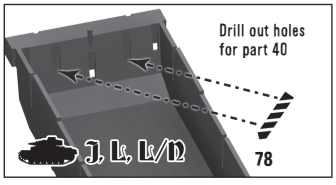

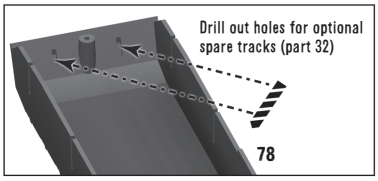

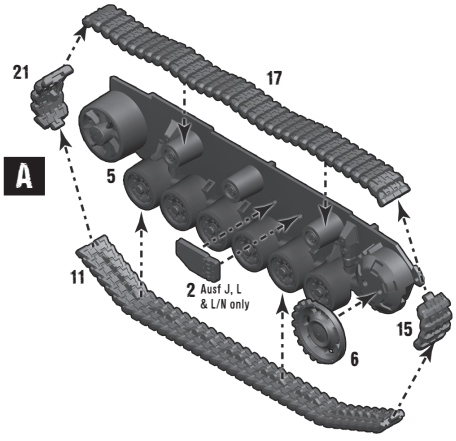

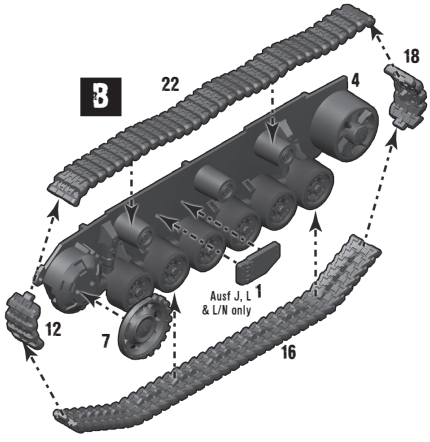

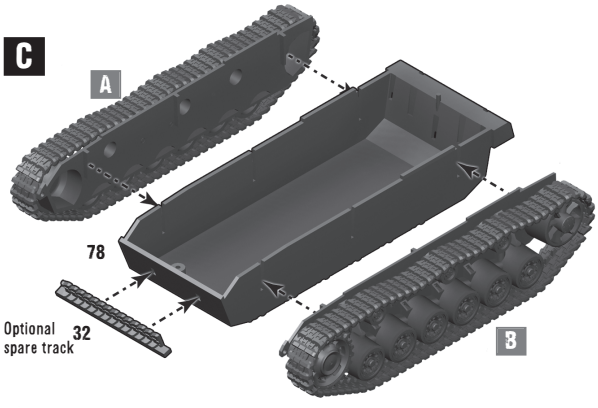

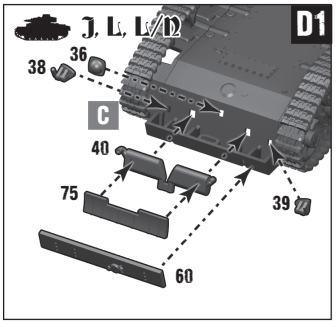

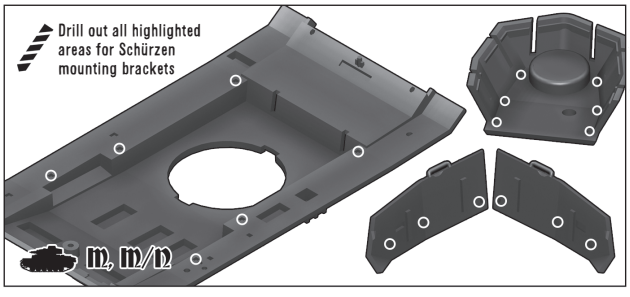

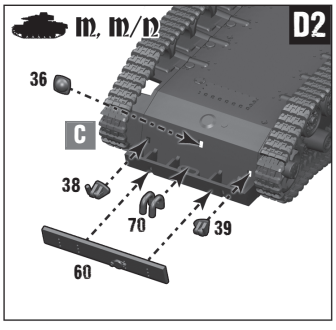

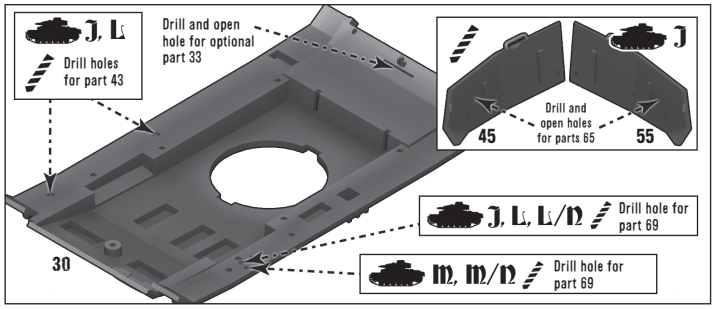

Plastic produced by

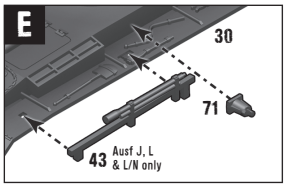

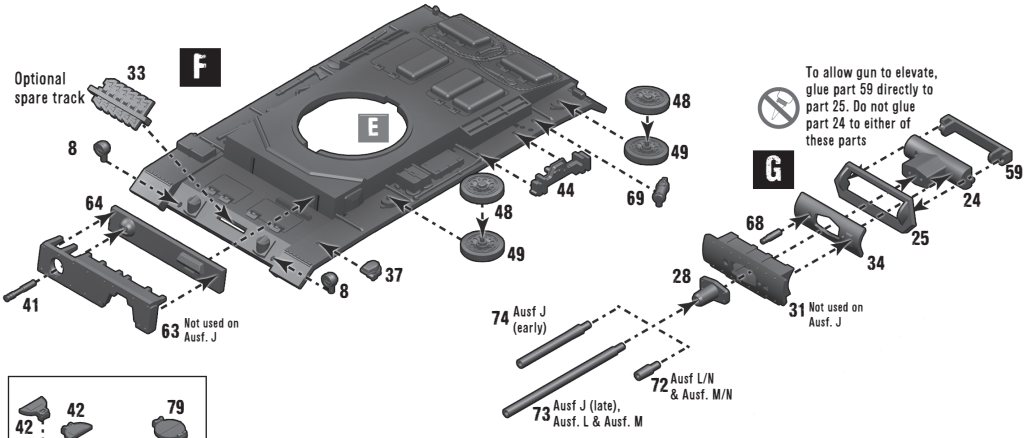

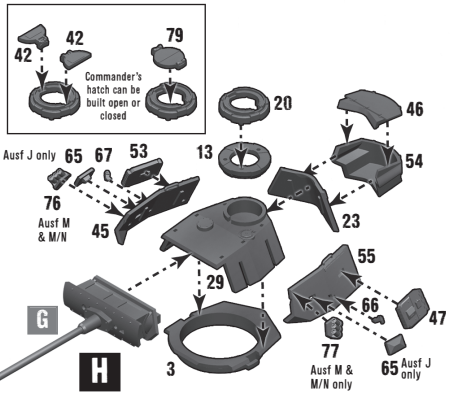

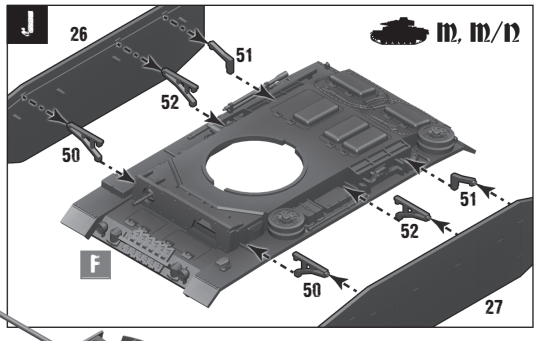

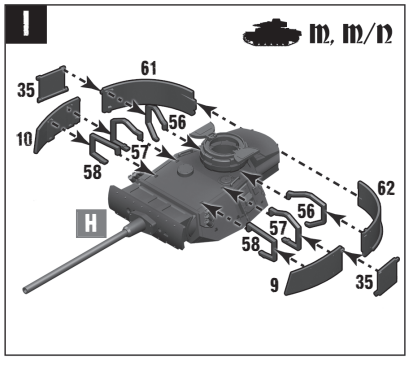

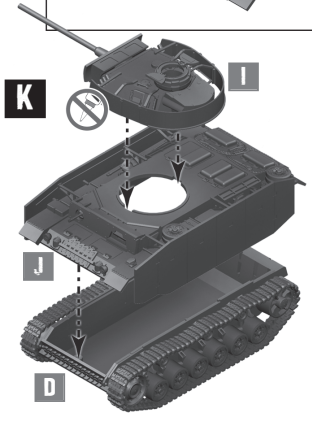

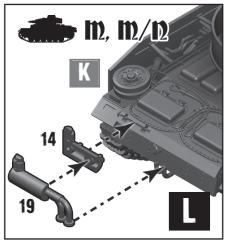

Component code: 4070100011