World War II Wargames Rules

BOLT ACTION™

www.boltaction.com

PANZER IV AUSF F1/G/H

Follow these simple instructions to build your plastic Panzer IV tank. We highly recommend doing a dry run at each stage before applying glue.

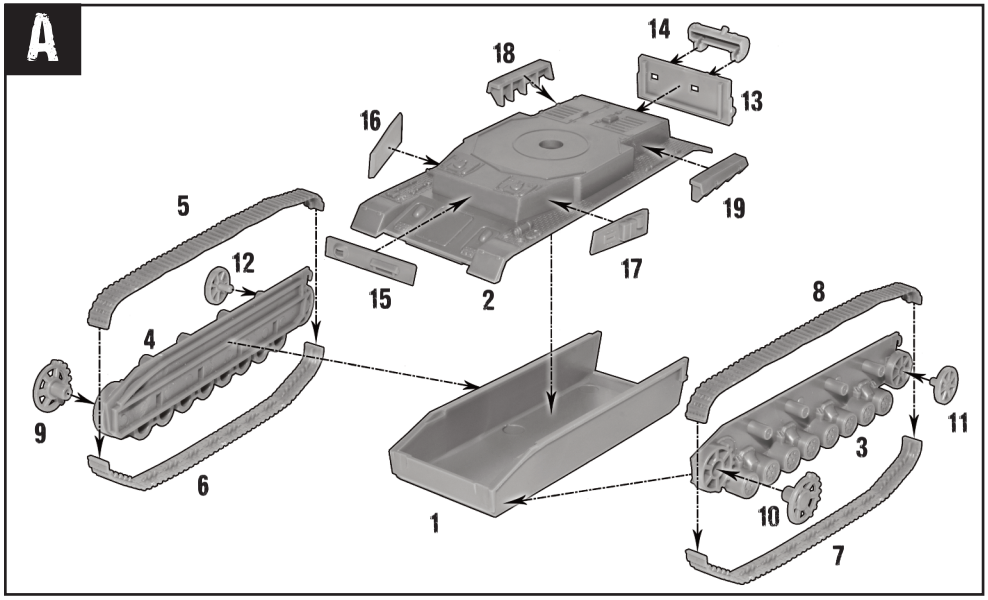

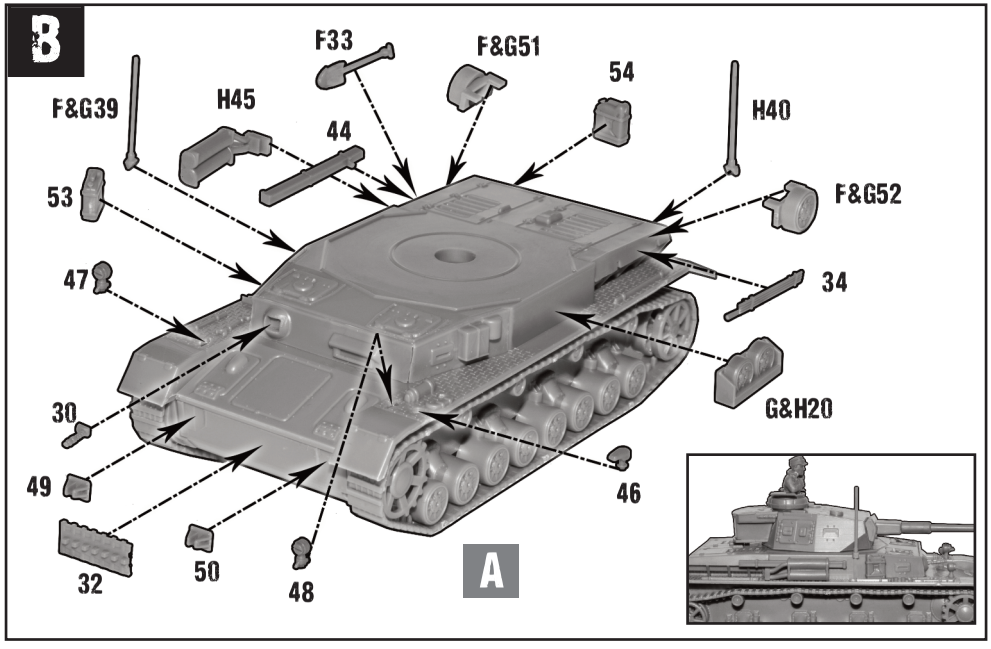

4070100008 Plastic Panzer IV Ausf F/G/H leaflet.qxp_Layout 1 09/10/2017 10:1[illegible] Page 1

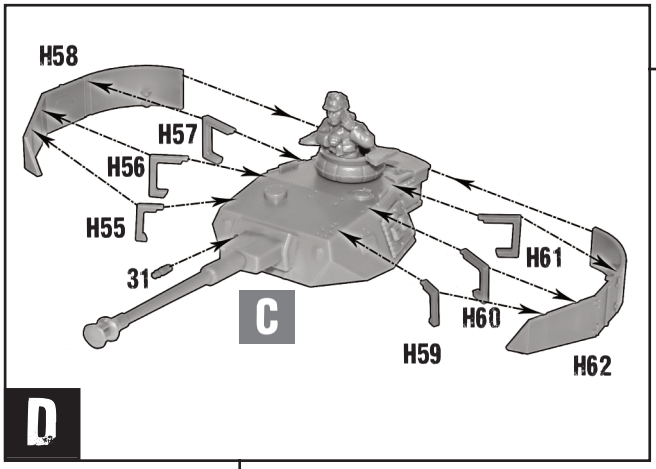

This kit can make one of three different variants of this German medium tank: F1, G or H. Where components are for a specific variant they will be labelled with the relevant letter (e.g. G36, F42, H37, etc.



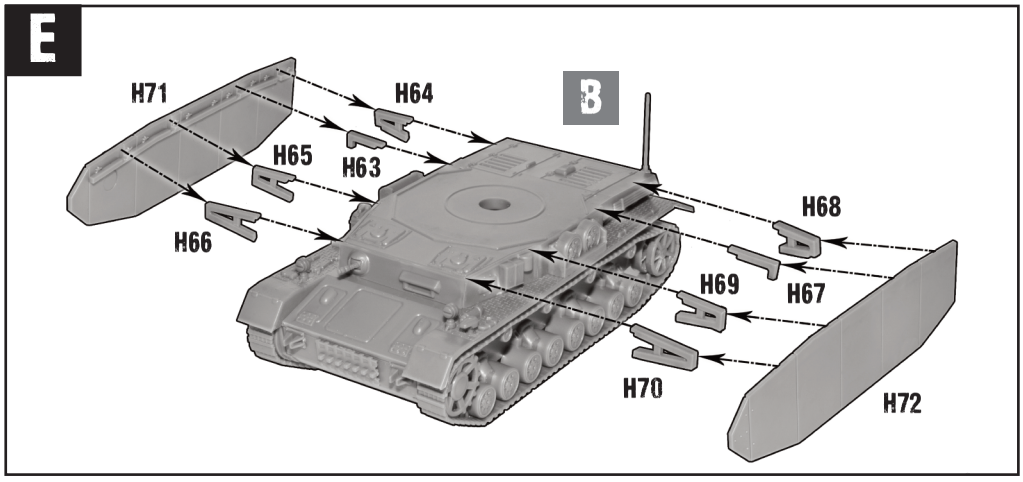

Component code: **4070100008**

4070100008 Plastic Panzer IV Ausf F/G/H leaflet.qxp_Layout 1 09/10/2017 10:11 Page 2