World War II Wargames Rules
BOLT ACTION™
www.boltaction.com

PUMA, SD.KFZ 234/2 ARMOURED CAR

Follow these simple instructions to build your plastic Puma armoured car. We highly recommend doing a dry run at each stage before applying glue.

A

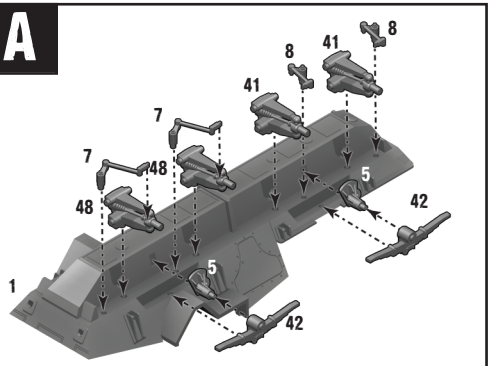

D

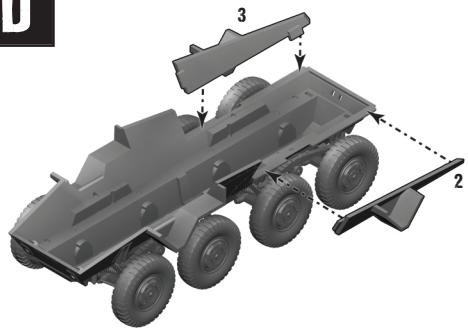

B

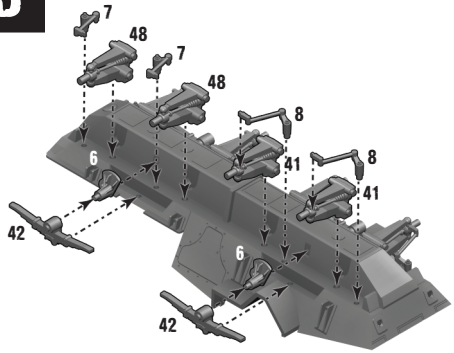

E

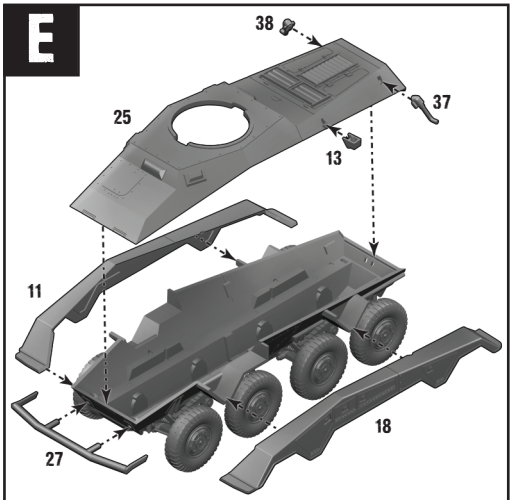

C

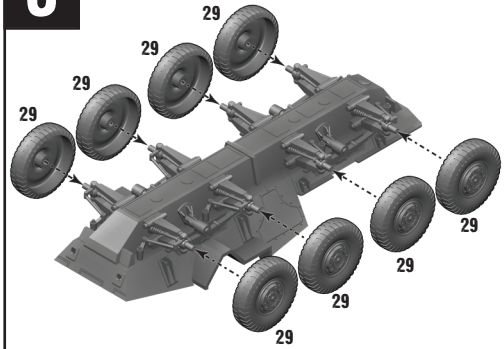

WARLORD GAMES™
www.warlordgames.com

Plastic produced by
ITALERI®

F

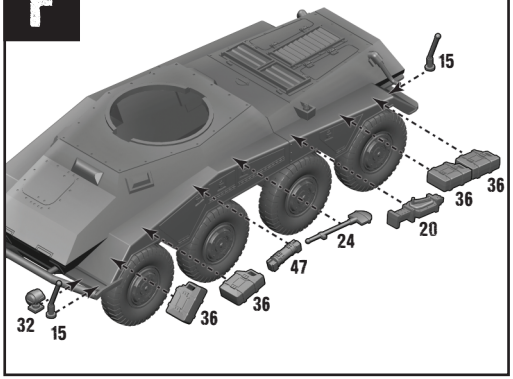

G

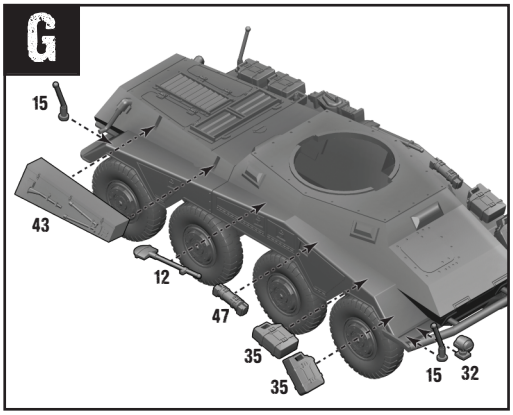

I

H

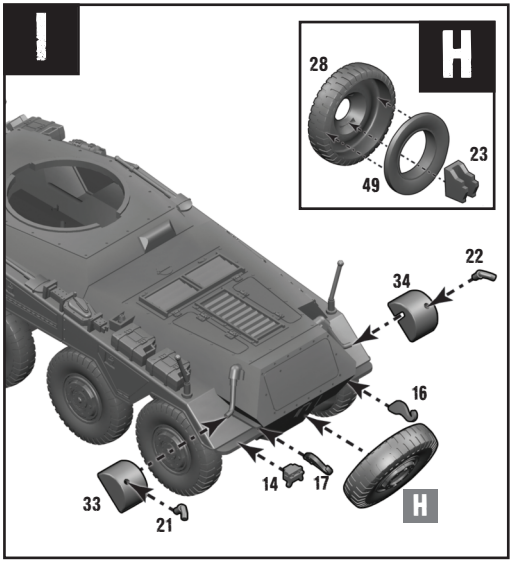

WARLORD GAMES™
www.warlordgames.com

Plastic produced by
ITALERI

J

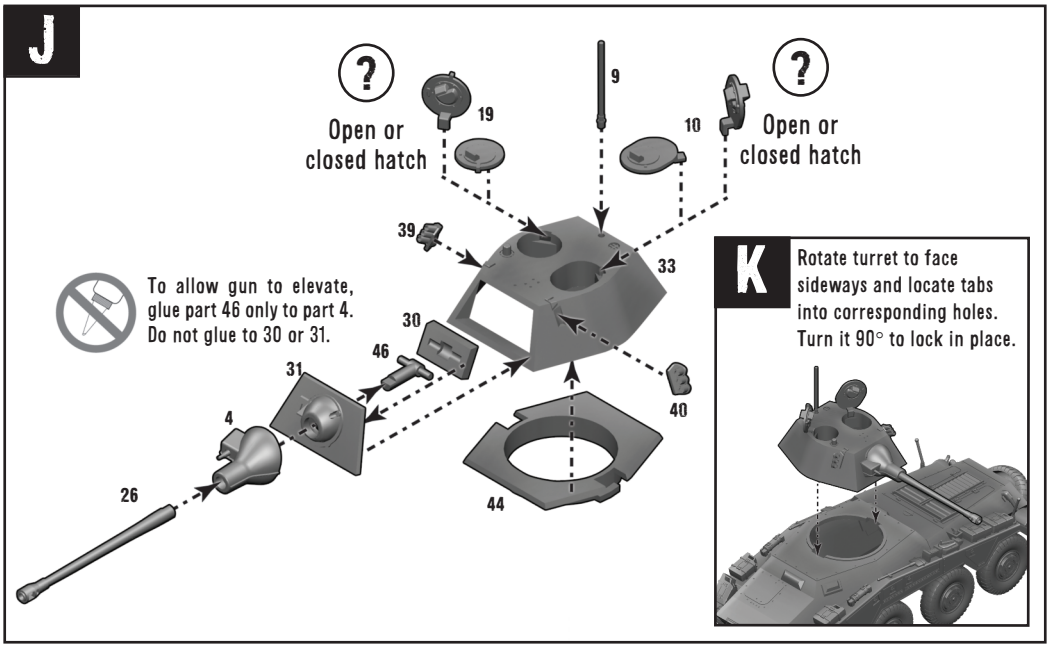

K

Rotate turret to face sideways and locate tabs into corresponding holes. Turn it 90° to lock in place.