WGB-BI-505 Sherman VC Firefly leaflet_Layout 1 04/05/16 15:31 Page 1

World War II Wargame
BOLT ACTION
www.boltaction.com

SHERMAN VC FIREFLY

Follow these instructions to build your plastic Sherman VC Firefly. Items marked with a ? are optional or can be assembled in different ways to create your own unique tank.

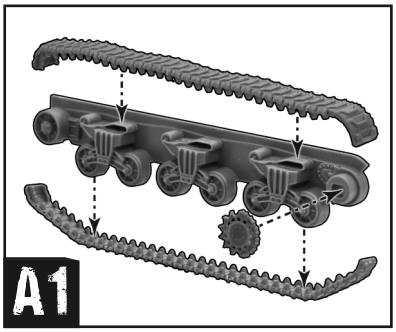

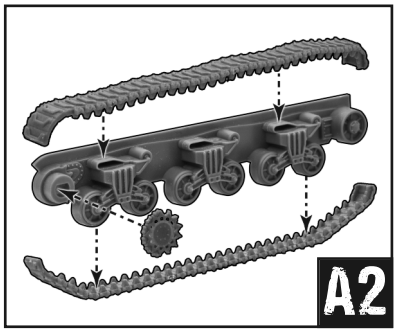

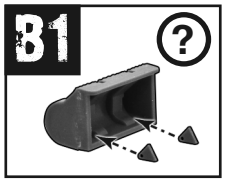

The bow of the Sherman can be assembled with towing hooks or a hedgerow cutter. If you choose the tow hooks, they must be inserted before attaching the bow to the rest of the hull.

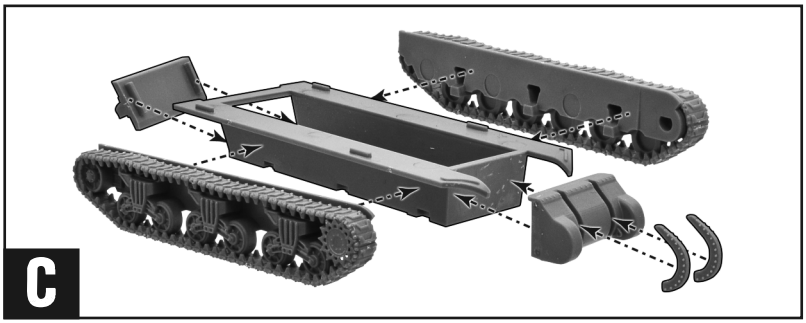

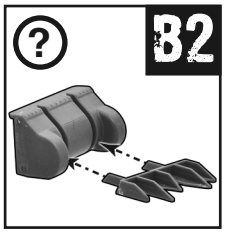

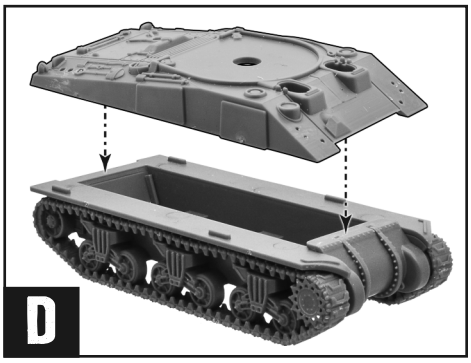

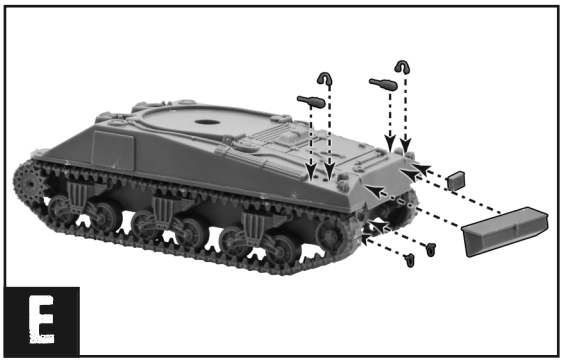

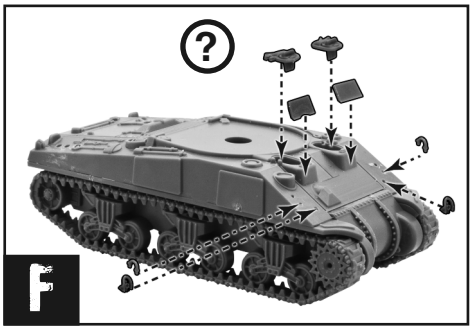

Hull hatches can be fitted in an open or closed position should you want to model the tank with a driver or machine-gunner.



WARLORD GAMES
www.warlordgames.com

G

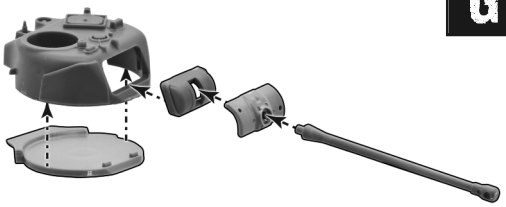

H



I

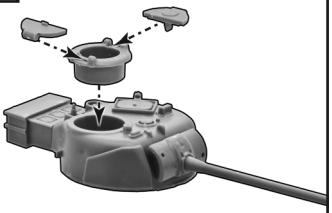

J

Fit the cupola hatches in an open position to use one of the tank commanders.

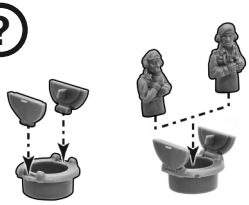

K



L

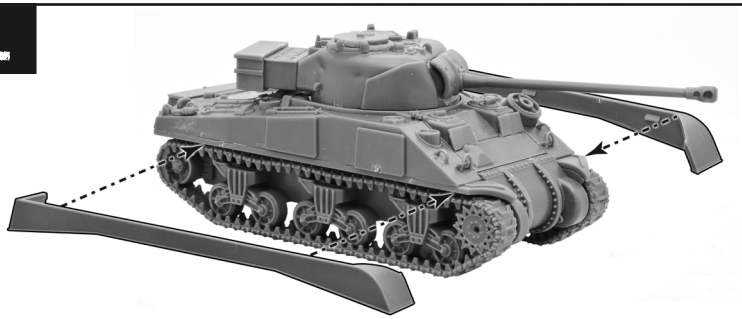

The tank can be assembled with optional sand guards. These were fitted at the factory, but were removed by many crews, especially when fighting in Northern Europe.

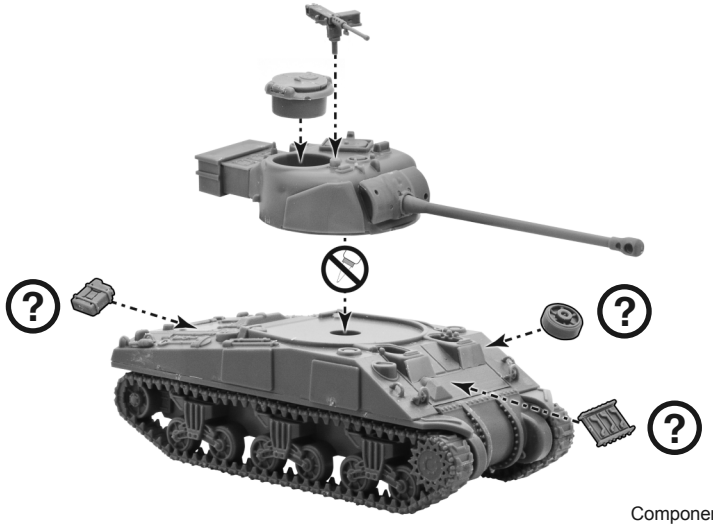

M

Component code: 4070000015