BOLT ACTION

UNIVERSAL CARRIER

Follow these simple instructions to build your plastic carrier.

The Carrier can be built as either a Mark I or Mark II version as shown on this leaflet.

WARLORD GAMES
warlordgames.com

Component code: 4070000010

1

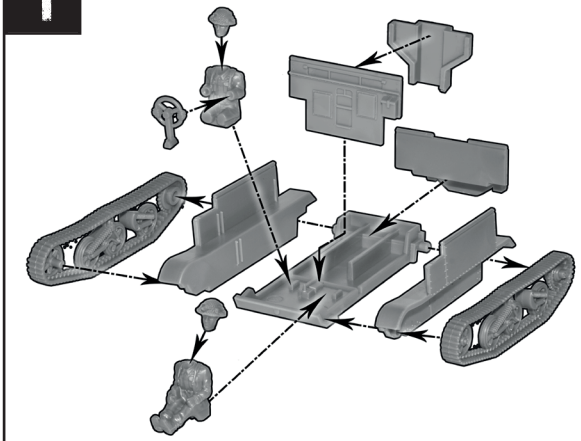

2

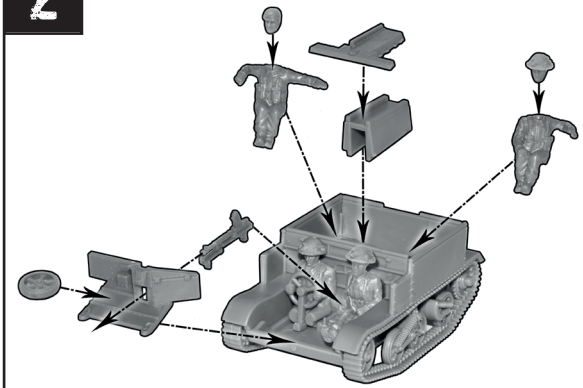

OPTION A: MK I CARRIER

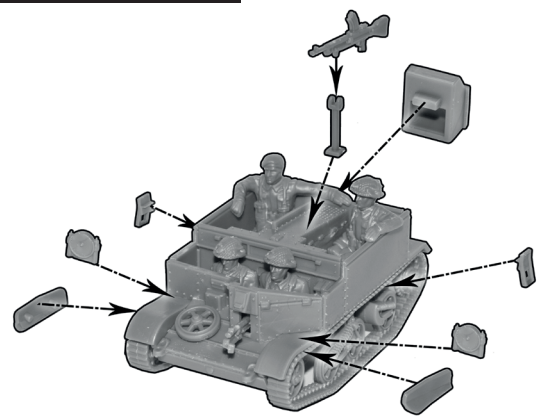

OPTION B: MK II CARRIER

