World War II Wargame
BOLT ACTION
www.boltaction.com

SHERMAN V MEDIUM TANK

Follow these instructions to build your plastic Sherman tank. Items marked with a ? are optional or can be assembled in different ways – use them to create your own unique tank.

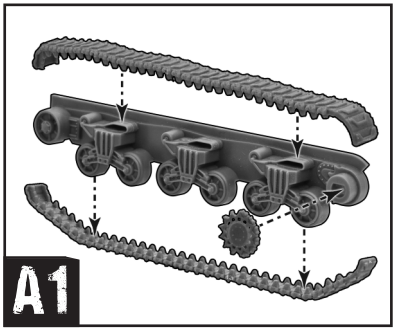

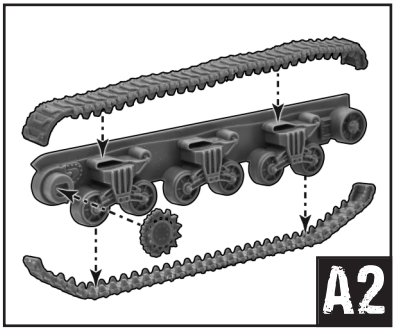

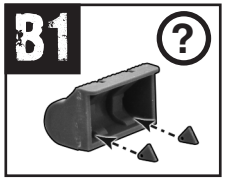

The bow of the Sherman can be assembled with towing hooks or a hedgerow cutter. If you choose the tow hooks, they must be inserted before attaching the bow to the rest of the hull.

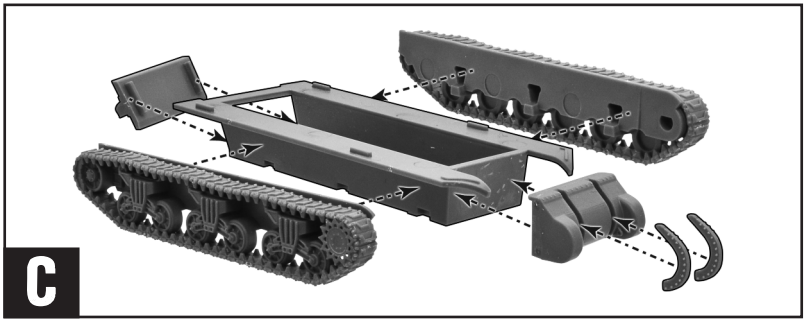

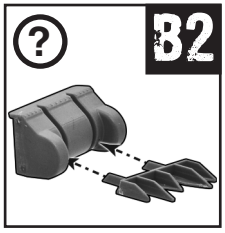

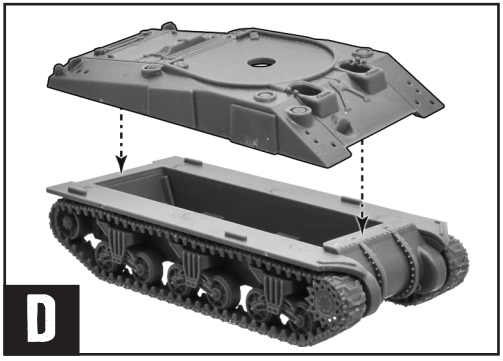

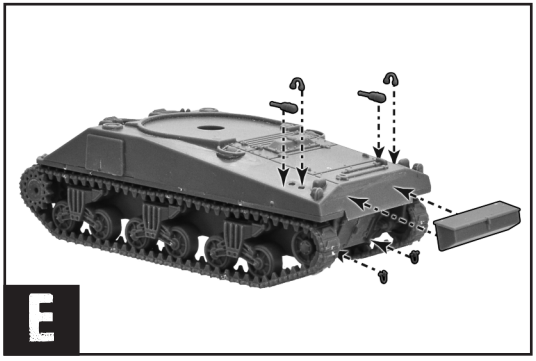

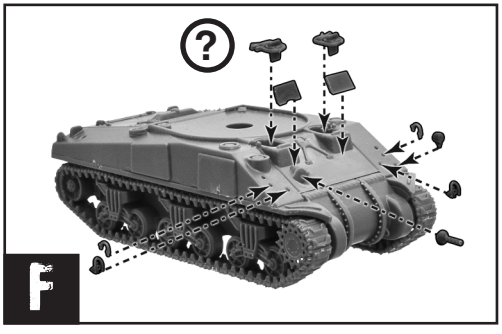

Hull hatches can be fitted in an open or closed position should you want to model the tank with a driver or machine-gunner.

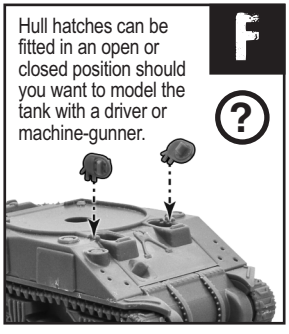

WARLORD GAMES
www.warlordgames.com

G

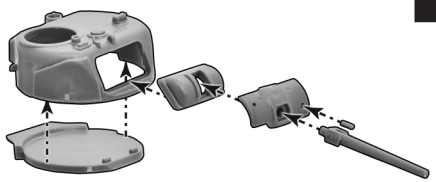

H

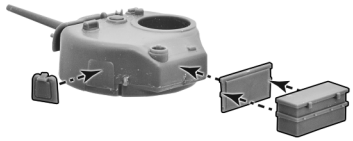

I

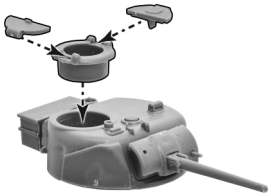

J

Fit the cupola hatches in an open position to use one of the tank commanders.

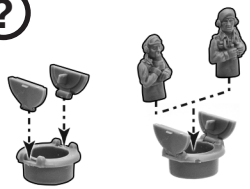

K



M



The tank can be assembled with optional sand guards. These were fittted at the factory, but were removed by many crews, especially when fighting in Northern Europe.

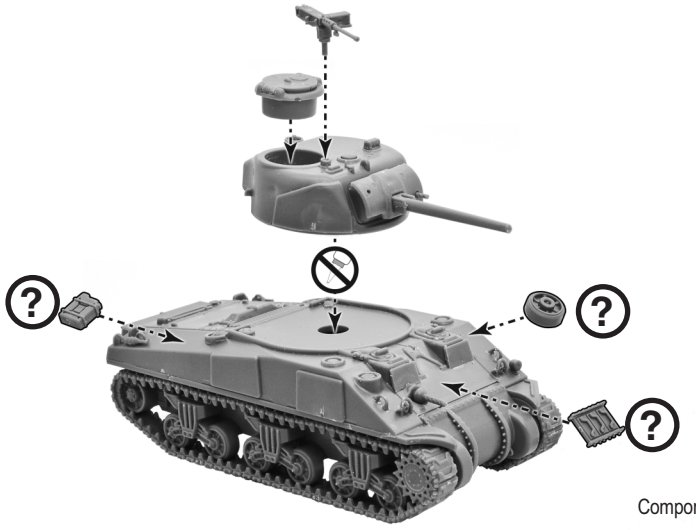

L

Component code: 4070000014